NZXT

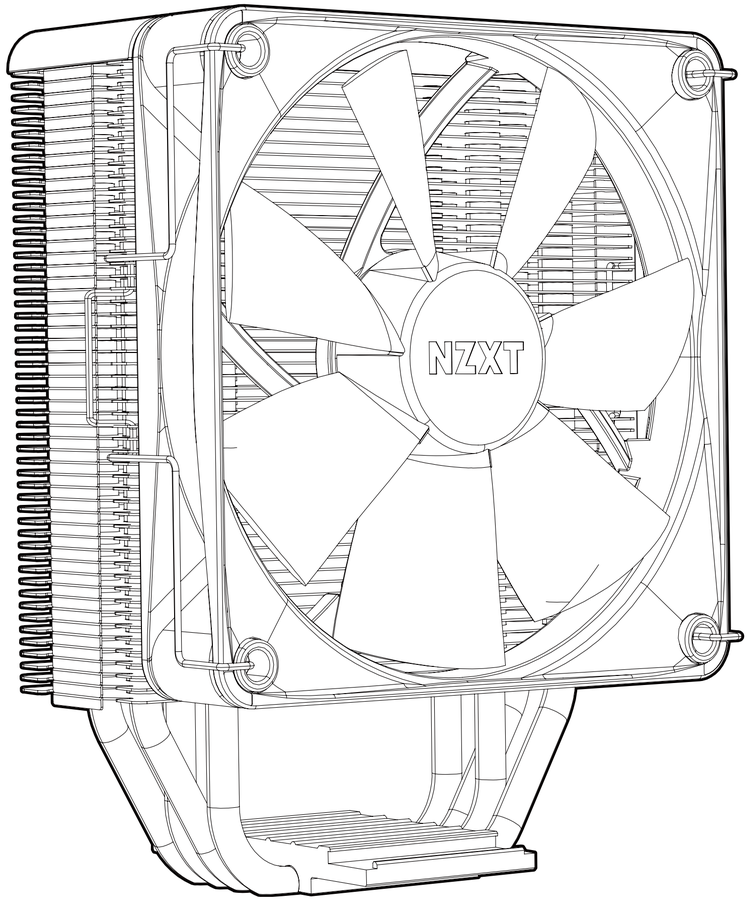

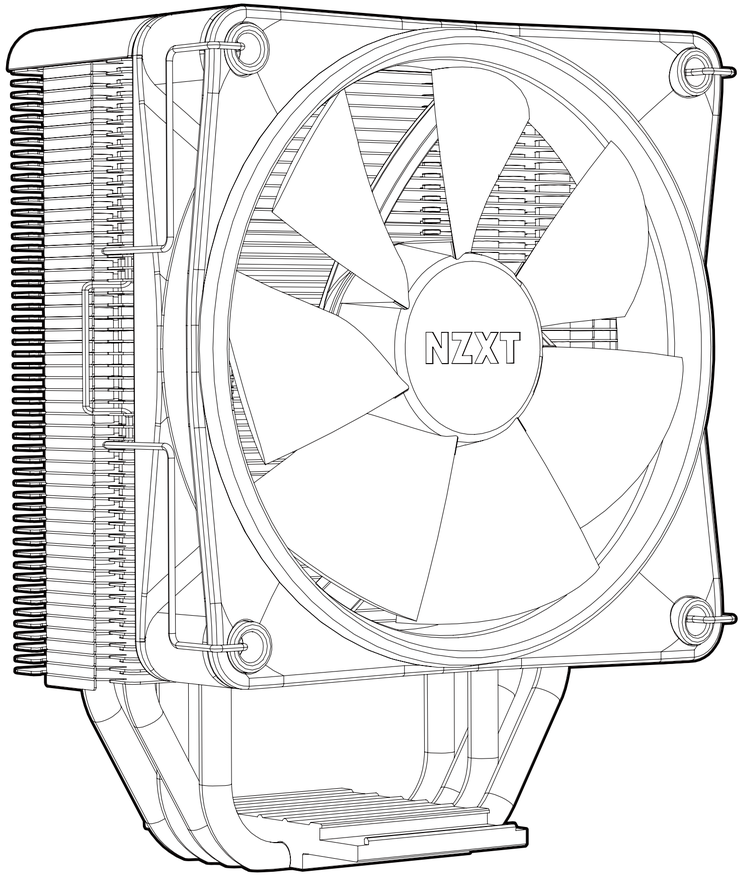

T120 | T120RGB

REFRIGERATORE AD ARIA PER CPU |
REFRIGERATORE AD ARIA PER CPU CON RGB

ITALIANO

INDICE

VERSION 1.0

1. ELENCO DEI COMPONENTI 02

2. INSTALLAZIONE 04

3. DOWNLOAD DI NZXT CAM 10

4. APPENDICE A-1

1. ELENCO DEI COMPONENTI

A. Dissipatore x1

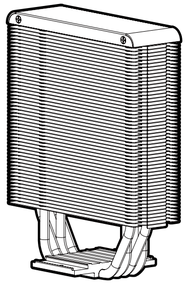

T120

B. Serie F - Ventola a pressione statica x1

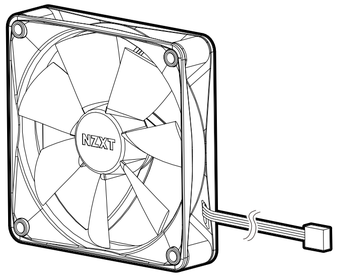

T120RGB

C. Serie F - Ventola RGB x1

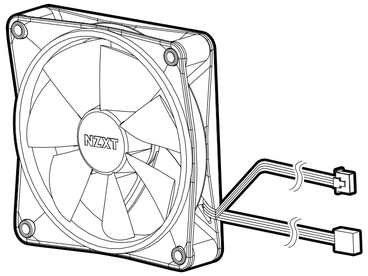

D. Clip della ventola x4

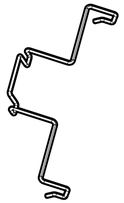

E. Piastra posteriore Intel - LGA 1700 x1

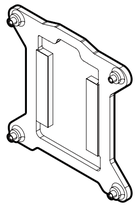

F. Piastra posteriore Intel - LGA 1200/115X x1

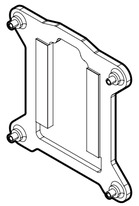

G. Staffe di fissaggio Intel (Preinstallato) x2

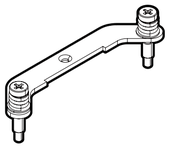

1. ELENCO DEI COMPONENTI

H. Staffe di fissaggio AMD x2

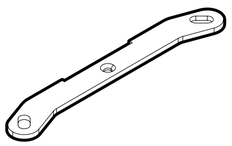

I. Viti a testa svasata (Preinstallato) x2

J. Guaine AMD x4

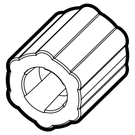

K. #6-32 viti per AMD x4

L. Pasta termica NZXT ad alte prestazioni 1 g x1

T120RGB

M. Adattatore 200mm 5V ARGB (femmina) a NZXT RGB (maschio) x1

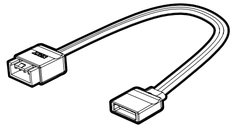

2. INSTALLAZIONE

PASSAGGIO 1. (INTEL)

Installare la piastra posteriore Intel (LGA 1700 o 1200/115X) sul retro della scheda madre.

INTEL SOCKET 1700 or 1200/115X

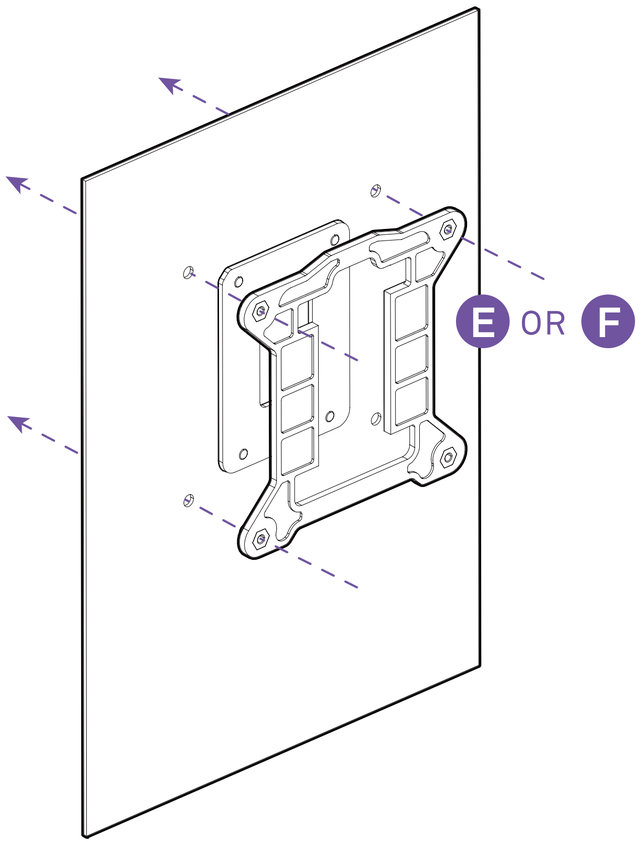

PASSAGGIO 1. (AMD)

Rimuovere la staffa di montaggio di serie AMD e tenere la piastra posteriore originale sul retro della scheda madre.

AMD SOCKET AM5, AM4, STRX4* & TR4*

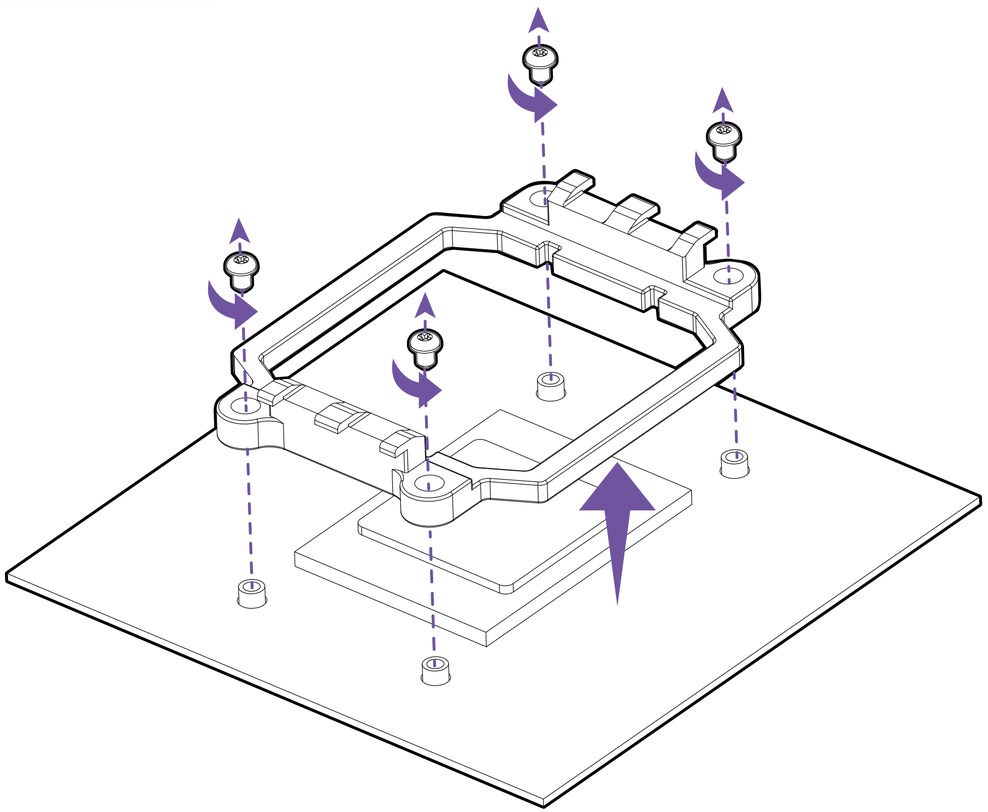

PASSAGGIO 2. (INTEL)

Preinstallato

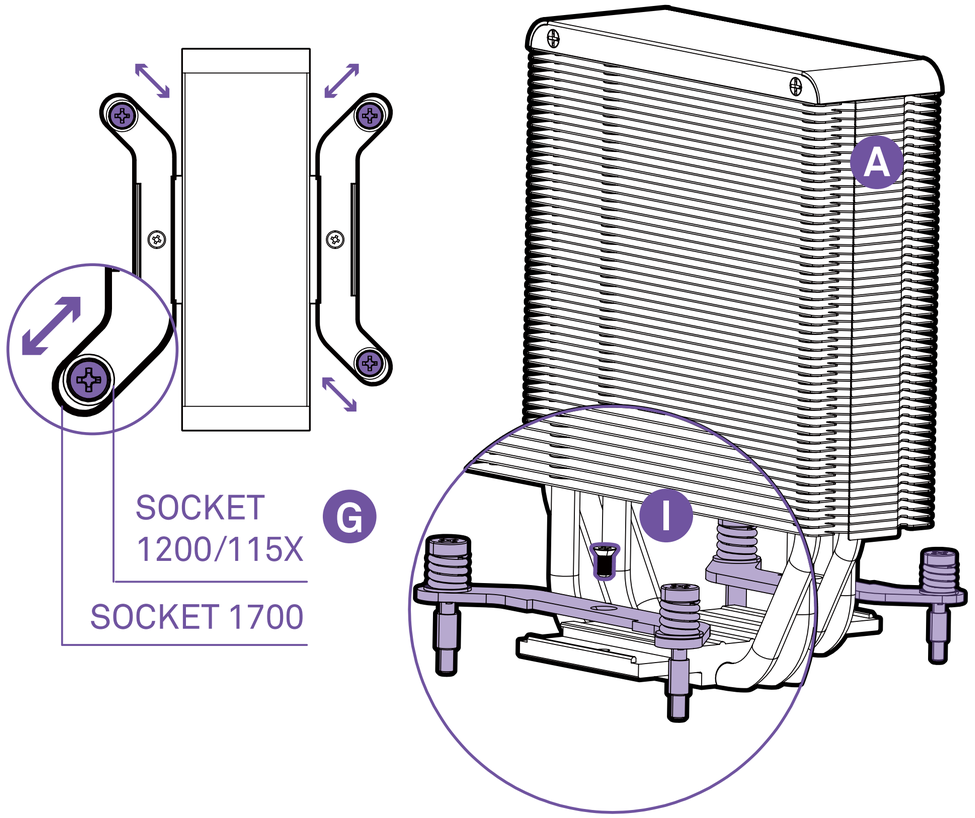

PASSAGGIO 2. (AMD)

Installare le staffe di fissaggio verso il dissipatore e fissare con le viti a testa svasata.

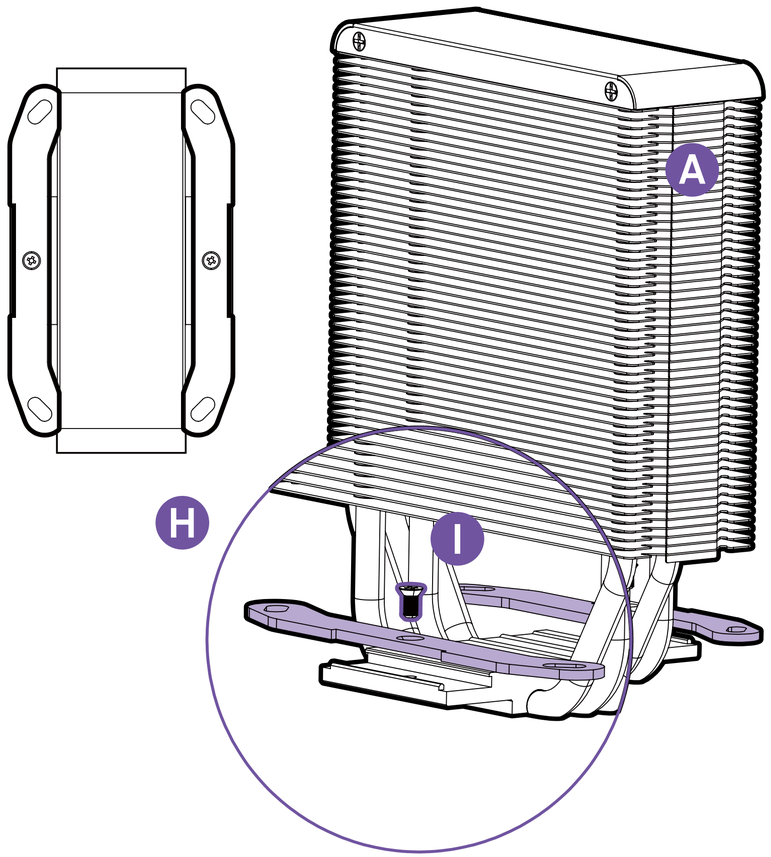

PASSAGGIO 3.

Rimuovere l'adesivo di protezione dalla superficie di contatto della CPU.

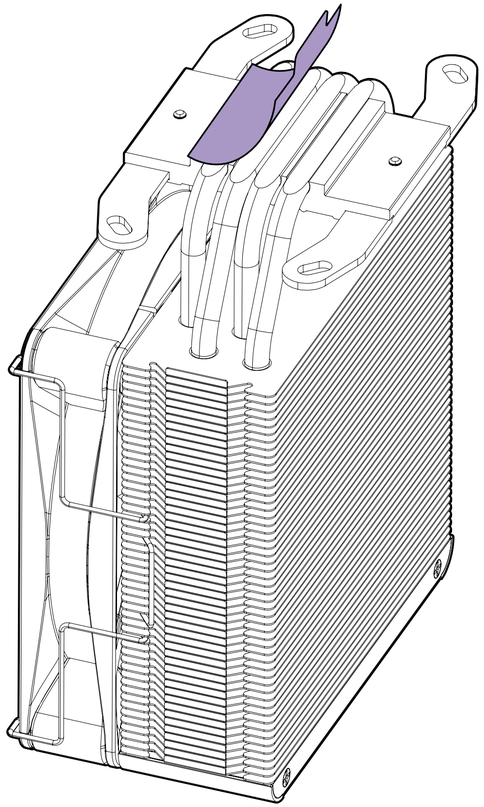

PASSAGGIO 4.

Applicare piastra termica sulla CPU.

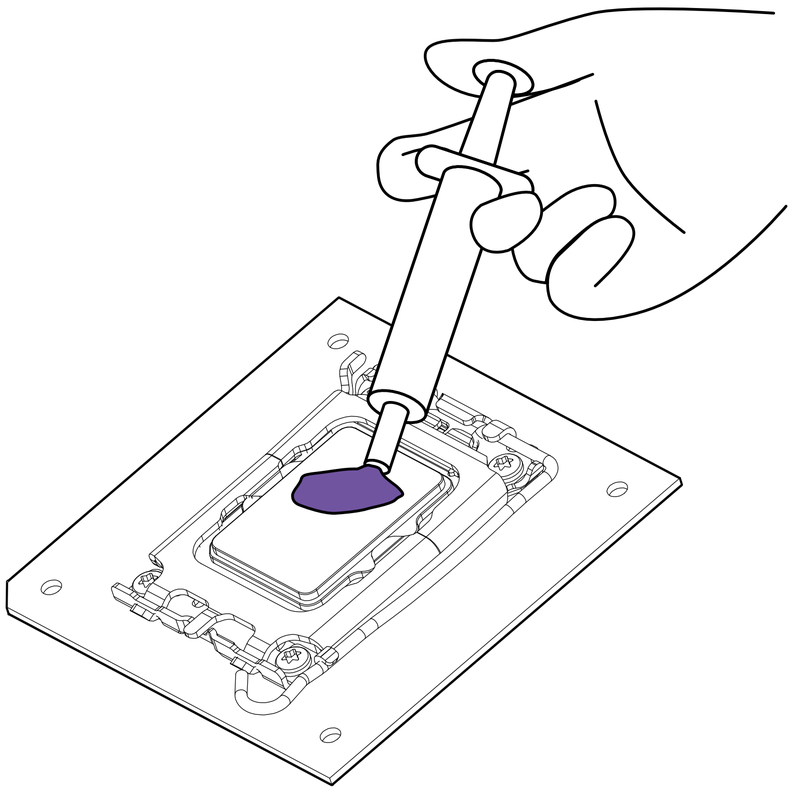

PASSAGGIO 5. (INTEL)

Posizionare il dissipatore con la staffa di supporto sulla CPU e assicurarsi che le viti della staffa si inseriscano nei fori della piastra posteriore. Fissare le viti nell'ordine indicato.

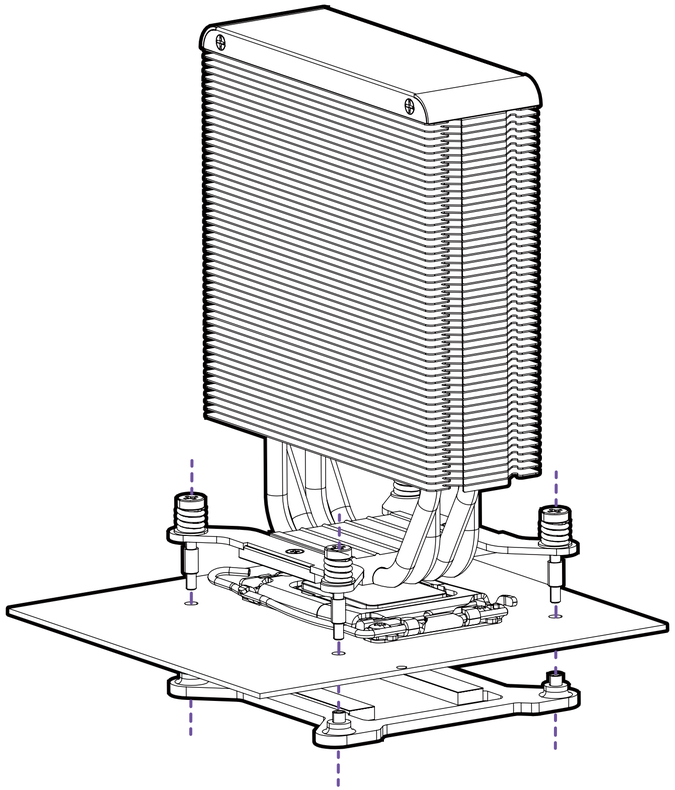

PASSAGGIO 5. (AMD)

Installare le quattro guaine AMD e poi posizionare il dissipatore con la staffa di supporto. Fissarlo con le #6-32 viti nell'ordine indicato.

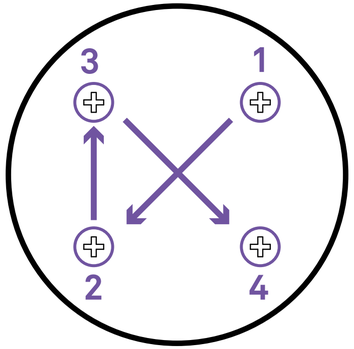

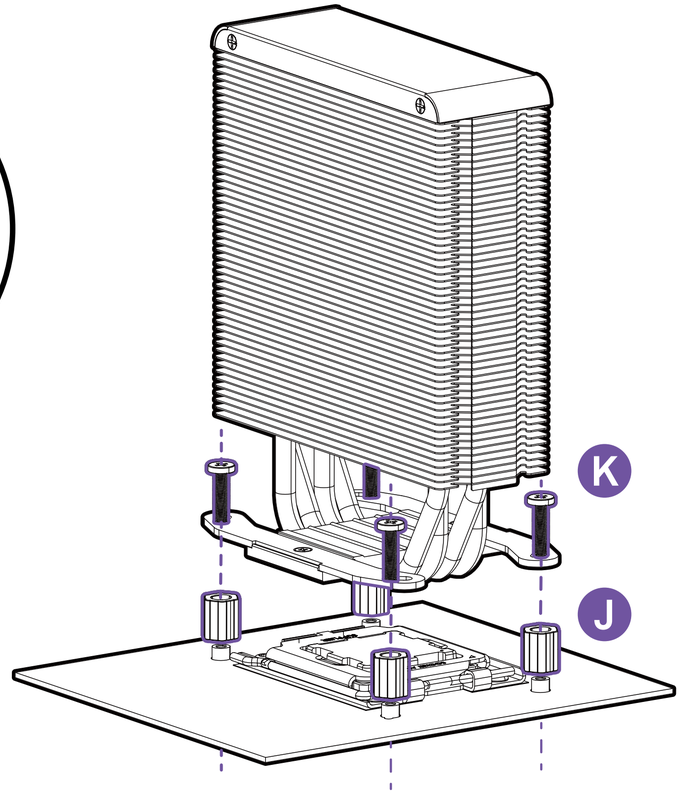

PASSAGGIO 6.

Fissare la ventola sul dissipatore con le clip della ventola.

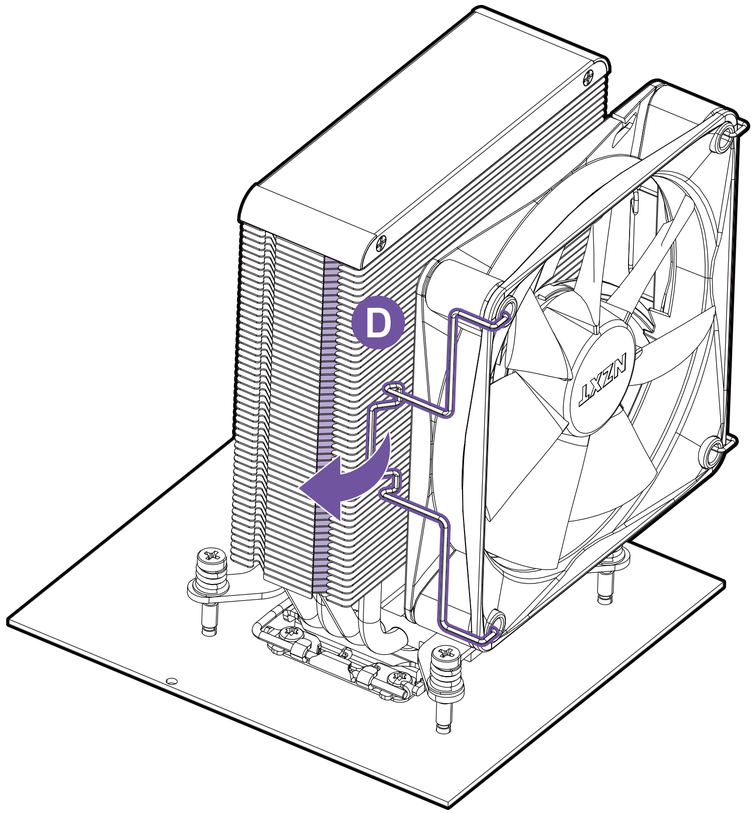

PASSAGGIO 7.

Connettere il cavo della ventola PWM a 4 pin a un connettore aperto della scheda madre o del controller ventole.

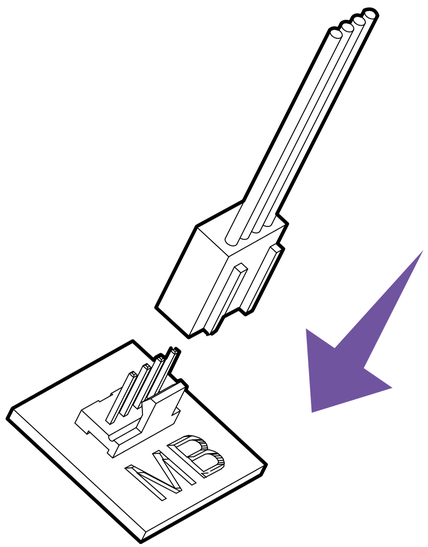

OR

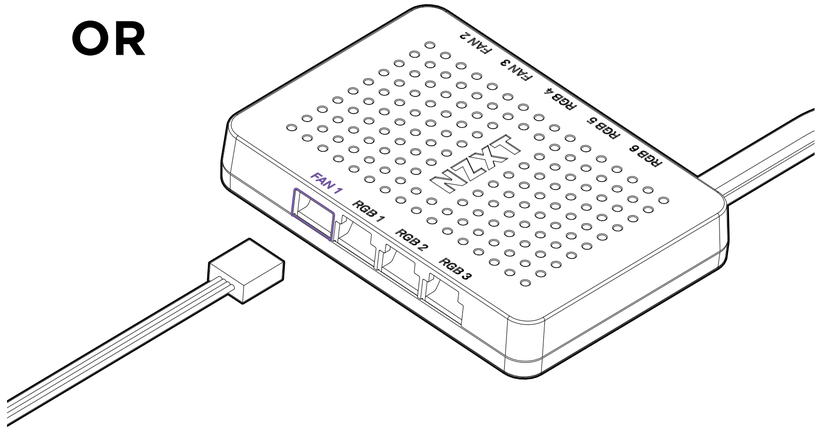

ONLY FOR T120RGB OPTION 5V ARGB

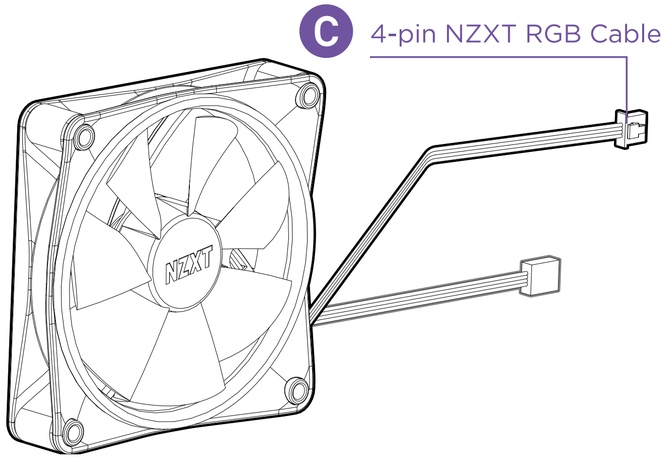

OPTION 1

NZXT RGB lighting channel on the motherboard.

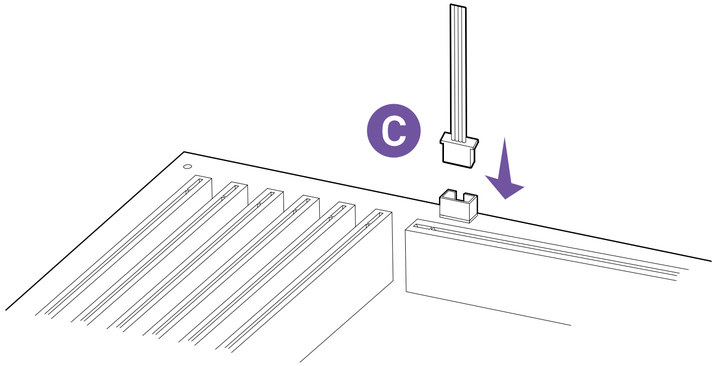

OPTION 2

NZXT RGB lighting channel on your lighting controller.

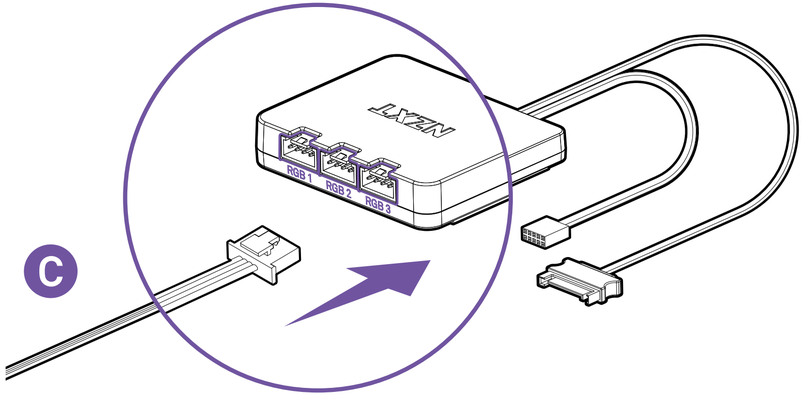

OPTION 3

5V ARGB (Female) to NZXT RGB (Male) Adapter.

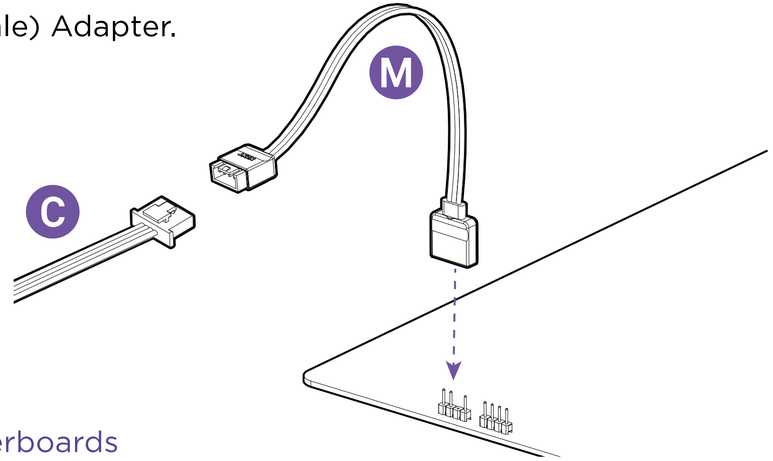

WARNING

Do not connect to 12V RGB on motherboards

3. DOWNLOAD DI NZXT CAM

NZXT CAM

To enable control of your RGB Fans, download and install CAM from nzxt.com/software/cam.

Para habilitar el control de sus ventiladores RGB, descargue e instale CAM desde nzxt.com/software/cam.

Pour permettre le contrôle de votre ventilateurs RGB, téléchargez et installez CAM via nzxt.com/software/cam.

Om de RGB Lüfter te activeren moet je de NZXT CAM downloaden van nzxt.com/software/cam en installeren.

Per controllare il ventola RGB, scaricare e installare NZXT CAM da nzxt.com/software/cam.

Para controlar seus ventiladores RGB, baixe e instale o CAM em nzxt.com/software/cam.

Для того чтобы включить управление Вентилятор RGB, загрузите и установите приложение NZXT CAM со страницы nzxt.com/software/cam.

RGB 팬 제어를 활성화하려면 nzxt.com/software/cam 에서 NZXT CAM을 다운로드하여 설치하십시오.

RGB ファンの制御を有効にするには、nzxt.com/software/cam からNZXT CAMをダウンロードし、インストールしてください。

要控制 RGB 风扇，需下载安装 NZXT CAM，下载地址：nzxt.com/software/cam。

若要對於RGB 風扇進行控制，請從 nzxt.com/software/cam 下載並安裝 NZXT CAM。

4. APPENDICE

3.1 NZXT Global Warranty Policy A-2

3.2 Support and Service A-8

3.3 Regulations A-11

3.4 Revision History A-12

3.1 NZXT GLOBAL WARRANTY POLICY

This NZXT Global Warranty Policy governs the sale of products by NZXT to you.

I. WARRANTY LENGTH

Any replacement product will be covered under warranty for the remainder of the warranty period or thirty days, whichever is longer. Proof of purchase is required for warranty service.

II. WHO IS PROTECTED

The Warranty covers only NZXT products purchased by the original consumer.

NEW NZXT PRODUCT	WARRANTY LENGTH FOR PARTS
Computer Cases	2 Years
Temperature Meters	2 Years
Fans	2 Years
Lighting	2 Years
Accessories	2 Years
Air Coolers	2 Years
Mixer	2 Years
Headset/Headphone	2 Years
Headset/Headphone Storage	2 Years
Kraken 120	3 Years
Motherboards	4 Years
Kraken X/Z Coolers	6 Years
Power Supply	10 Years

REFURBISHED NZXT PRODUCT	WARRANTY LENGTH FOR PARTS
All NZXT Certified Refurbished Products	1 Years

III. WHAT IS AND IS NOT COVERED

Please note that our warranty is not an unconditional guarantee. If the product, in NZXT's reasonable opinion, malfunctions within the warranty period, NZXT will provide you at its sole discretion with a repaired or replacement product, either new or refurbished, with a similar function that is equal or greater in value depending on supply.

Our warranty does not cover the following:

- any product or serial number/warranty sticker modification applied without permission from NZXT;
- any damage that is not a manufacturing defect;
- damage, deterioration or malfunction resulting from: accident, abuse, misuse, neglect, fire, water, lightning, or other acts of nature, unauthorized product modification or failure to follow instructions included with the product;
- improper installation, unauthorized alterations or modifications, or repair or attempted repair by anyone not authorized by NZXT;
- shipping or transport damage (claims must be made with the carrier);
- normal wear and tear.

NZXT does not warrant that this product will meet your requirements. It is your responsibility to determine the suitability of this product for your purpose. For NZXT Store orders, we cover two way return shipping for all exchanges and returns. For all other authorized dealers, NZXT Support does not cover return shipping and only covers one way shipping from NZXT back to the end user for exchanges. Two way expedited shipping is provided for all PSUs covered under the Less Than Three program, indiscriminate of purchase location, provided the location is an approved NZXT reseller.

IV. EXCLUSION OF DAMAGES (DISCLAIMER)

NZXT's sole obligation and liability under this warranty is limited to the repair or replacement of a defective product with either a new or refurbished product with a similar function that is equal or greater in value at our option. NZXT shall not, in any event, be liable for any incidental or consequential damage, including but not limited to damages resulting from interruption of service and loss of data, business, or for liability in tort relating to this product or resulting from its use or possession.

V. LIMITATIONS OF IMPLIED WARRANTIEST

Here are no other warranties, expressed or implied, including but not limited to those of merchantability or fitness for a particular purpose. The duration of implied warranties is limited to the warranty length specified in Paragraph I.

VI. TO OBTAIN TECHNICAL SUPPORT

If you have already referenced your product owner's manual and still need help, you may contact us by phone at +1 (800) 228-9395, by email at service@nzxt.com, or visit the NZXT Support site at nzxt.com/customer-support.

VII. HOW TO OBTAIN A WARRANTY SERVICE FROM NZXT

To receive a warranty service for your product when purchased directly from NZXT, you must submit a request via the NZXT Support site outlining the problem. If a technician deems the product defective or requiring testing, you will be required to provide a copy of your proof of purchase, which will enable you to submit a Return Merchandise Authorization "RMA" request.

Once approved, you`ll receive an RMA number, upon which you will be asked to ship the defective item back to NZXT with the RMA number clearly marked or labelled on the package. NZXT recommends that appropriate measures are taken to safeguard the product from damage during shipping.

VIII. APPLICABLE LAW AND ADDITIONAL LEGAL RIGHTS FOR CONSUMERS

This warranty gives you specific legal rights. These conditions are governed and construed in accordance with the laws of California (with exception of its conflict of law provisions), and the application of the United Nations Convention of Contracts for the International Sale of Goods is expressly excluded. The non-exclusive jurisdiction of the courts of California is agreed, which means that you may bring a claim to enforce your consumer protection rights in connection with this Global Warranty in the country which you have your habitual residence where you may have additional rights. These rights may vary.

For original consumers who are covered by consumer protection laws or regulations in their country, state, or province of purchase or, if different, their country, state, or province of residence, the benefits conferred by this warranty are in addition to all rights and remedies conveyed by such consumer protection laws and regulations. To the extent that liability under such consumer laws can be limited, NZXT's liability is limited, and its sole option, to repair or replacement, either new or refurbished, with a similar function that is equal or greater in value depending on supply.

In the United Kingdom:

- For NZXT products sold to customers in the UK, during the expected lifespan of your product your legal rights entitle you to the following:
  - > Up to 30 days: if your goods are faulty, then you can get an immediate refund.
  - > Up to six months: if your goods can't be repaired or replaced, then you're entitled to a full refund, in most cases.
  - > Up to six years: if your goods do not last a reasonable length of time you may be entitled to some money back.
- If the person seeking to rely on the guarantee is not the original consumer, the NZXT Warranty will cover the product in relation to that person provided that they are able to provide proof of the transfer of the benefit of the guarantee from the original consumer.
- The implied warranties under the Consumer Rights Act 2015 says that your goods must be as described, fit for all purposes for which such goods are usually supplied, and of satisfactory quality.

In the EU:

- If you are a consumer and have your habitual residence in the EU, you additionally enjoy the protection afforded to you by provisions that cannot be derogated from by agreement by virtue of the law where you have your habitual residence.

IX. WARRANTY SERVICE FROM RESELLERS

In the event that a warranty service is sought, you must provide proof of purchase (store receipt or invoice) in order to receive the service and if deemed necessary, repair or replacement product.

In North America:

Within the first 60 days after purchase, please return your product (or for power supplies installed within our enclosures, just the failed power supply) to your dealer or reseller for a replacement. If the product is still within warranty and you can no longer return it to your dealer, please contact NZXT Customer Support (see above) for assistance and instructions. NZXT will not accept returns without prior approval and an RMA number.

In Europe:

Within the first year after purchase, please return your product (or for power supplies installed within our enclosures, just the failed power supply) to your dealer or reseller for a replacement. If the product is still within warranty and you can no longer return it to your dealer, please contact NZXT Customer Support (see above) for assistance and instructions. NZXT will not accept returns without prior approval.

In Australasia:

Within the first two years after purchase, please return your product (or for power supplies installed within our enclosures, just the failed power supply) to your dealer or reseller for a replacement. If the product is still within warranty and you can no longer return it to your dealer, please contact NZXT Customer Support (see above) for assistance and instructions. NZXT will not accept returns without prior approval.

The cost of shipping will be borne at the first instance by you; however, if the purchased item is defective, NZXT will reimburse reasonable postage or transportation of costs.

Outside North America, Europe, and Australasia:

If your product needs to be returned within the warranty period, please contact the retailer or distributor from whom you purchased the product.

X. NZXT.COM STORE RETURNS/EXCHANGE POLICY

Eligible products under this NZXT Warranty qualify for a full refund or exchange only with an authorized RMA number and if the item is returned to the NZXT.com store inventory within 30 days of purchase. Returns are not allowed beyond 30 days of the purchase date. The NZXT.com Store reserves the right to deny any return or exchange. Refunds will be credited to the original method of payment. To initiate a return, simply submit a request via NZXT support site.

NZXT, Inc./ 15736 E Valley Blvd, City of Industry, CA 91744, USA
NZXT Europe GmbH/ Industriering Ost 66 | 47906 Kempen | Germany
+1 (800) 228-9395 / service@nzxt.com / NZXT.com

> Visit nzxt.com/warranty and support.nzxt.com for information on warranty coverage and service.

> Visite el sitio Web nzxt.com/warranty y support.nzxt.com para obtener información sobre la cobertura y el servicio de la garantía.

> Visitez nzxt.com/warranty et support.nzxt.com pour les informations de la couverture de la garantie et du service.

> Informationen zu Geltungsbereich und Service der Garantie finden Sie unter support.nzxt.com und nzxt.com/warranty.

> Visitare il sito nzxt.com/warranty e support.nzxt.com per informazioni sulla copertura e sul servizio della garanzia.

> Visite nzxt.com/warranty e support.nzxt.com para obter informações sobre a cobertura da garantia e assistência.

> Подробную информацию об условиях гарантийного обслуживания см. на веб-сайте nzxt.com/warranty и support.nzxt.com.

> 제품 보증 범위와 서비스 정보를 확인하시려면 nzxt.com/warranty 또는 support.nzxt.com 을 방문해 주시기 바랍니다.

> 保証範囲およびサービスに関する情報については、support.nzxt.com と nzxt.com/warranty にアクセスしてください。

> 请造访 nzxt.com/warranty 和 support.nzxt.com 了解保修范围和服务的信息。

> 請訪問 nzxt.com/warranty 和 support.nzxt.com 了解產品保固範圍和更多服務訊息。

3.2 SUPPORT AND SERVICE

SUPPORT AND SERVICE

If you have any questions or problems with the NZXT product you purchased, please don't hesitate to contact us using our support system. support.nzxt.com
Please include a detailed explanation of your problem and your proof of purchase. For comments and suggestions, you can e-mail our design team, designer@nzxt.com. Lastly we would like to thank you for your support by purchasing this product.
For more information about NZXT, please visit us online. NZXT Website: NZXT.com

SUPPORT ET SERVICE

Si vous avez des questions ou des problèmes avec le produit NZXT que vous avez acheté, n'hésitez pas à contacter service@nzxt.com avec une description détaillée de votre problème et votre preuve d'achat. Vous pouvez aussi commander des pièces de remplacement auprès support.nzxt.com. Pour les commentaires et les suggestions, envoyez un email à notre équipe de design, designer@nzxt.com. Merci d'avoir acheté ce produit de NZXT. Pour plus d'informations sur NZXT, visitez notre site Web. Site Web de NZXT : NZXT.com

SOPORTE Y SERVICIO

Si tiene preguntas o problemas con el producto NZXT que usted compró, no dude en ponerse en contacto con service@nzxt.com y suministrar una explicación detallada de su problema así como su prueba de compra. Puede hacer consultas sobre piezas de repuesto en support.nzxt.com. Para comentarios y sugerencias, escriba un mensaje de correo electrónico a nuestro equipo de diseño: designer@nzxt.com. Gracias por comprar un producto NZXT. Para más información acerca de NZXT, visítenos en línea. Página web de NZXT: NZXT.com

KUNDENDIENST UND SERVICE

Falls Fragen oder Probleme bezüglich Ihres NZXT-Produktes auftreten, wenden Sie sich bitte mit einer detaillierten Problembeschreibung und Ihrem Kaufbeleg an service@nzxt.com.
Ersatzteile können Sie unter support.nzxt.com anfragen. Kommentare und Anregungen senden Sie bitte per designer@nzxt.com an unser Designteam. Vielen Dank, dass Sie ein NZXT-Produkt erworben haben. Weitere Informationen über NZXT erhalten Sie im Internet. NZXT-Webseite: NZXT.com

ASSISTENZA E SERVIZIO

In caso di dubbi o problemi con il prodotto NZXT acquistato, non esitate a contattarci utilizzando il nostro sistema di assistenza. support.nzxt.com
Includere una spiegazione dettagliata del problema e la prova di acquisto. Per commenti e suggerimenti, siete pregati di inviare un messaggio al nostro team di progettisti, all'indirizzo: designer@nzxt.com. Infine, vogliamo ringraziarvi del vostro supporto con l'acquisto di questo prodotto. Per altre informazioni su NZXT, visitate il nostro sito. Sito NZXT: NZXT.com

ASSISTÊNCIA E MANUTENÇÃO

Caso tenha questões ou problemas com o produto NZXT adquirido, não hesite em contactar-nos através do endereço service@nzxt.com fornecendo a explicação detalhada do seu problema e a prova de compra. Poderá solicitar peças de substituição através do endereço support.nzxt.com. Para comentários e sugestões, contacte a nossa equipa de design através do endereço de e-mail, designer@nzxt.com. Obrigado por ter adquirido um produto NZXT. Para mais informações acerca da NZXT,
visite-nos online. Web site da NZXT: NZXT.com

СЛУЖБА ПОДДЕРЖКИ И ОБСЛУЖИВАНИЯ

В случае возникновения вопросов или неисправностей в приобретенных вами продуктах NZXT обращайтесь по адресу: service@nzxt.com с подробным описанием проблемы и подтверждением покупки. О наличии запчастей можно узнать, обратившись по адресу: support.nzxt.com. Замечания и предложения отправляйте в адрес нашей группы разработчиков: designer@nzxt.com. Благодарим вас за покупку продукта NZXT. Более подробная информация о компании NZXT представлена на наших веб-сайтах. Веб-сайт NZXT: NZXT.com

지원 및 서비스

구입한 NZXT 제품과 관련하여 질문 또는 문제가 있을 경우, 당사의 지원 시스템 (support.nzxt.com)을 사용하여 문의하십시오.
문제를 자세히 기술하고 구매 증빙을 제출하십시오. 의견 또는 제안 사항이 잇을 경우 당사 설계 팀에 designer@nzxt.com으로 이메일을 보내십시오. 마지막으로 이 제품을 구입하여 당사를 응원해 주셔서 감사합니다. NZXT에 대해 자세히 알려면 온라인으로 방문하십시오. NZXT 웹사이트: NZXT.com

サポートおよびサービス

購入されましたNZXTの製品に関するご質問または問題は、問題の詳細および購入の証明を添えて、ご遠慮なくservice@nzxt.com までご連絡ください。交換部品はsupport.nzxt.com までお尋ねください。ご意見およびご提案は弊社設計チーム、designer@nzxt.com までメールを送信してください。NZXT製品をご購入いただきましてありがとうございます。NZXTに関する詳細は、インターネット上のウェブサイトをご覧ください。NZXT ウェブサイト: NZXT.com

支持和服务

如果有任何疑问或者在使用 NZXT 产品的过程中遇到任何问题,欢迎联络 service@nzxt.com,联络时请提供关于问题的详细说明及购买凭证。您可以向 support.nzxt.com 查询更换部件。如有任何意见或建议,欢迎致信我们的设计团队,电子邮件地址是 designer@nzxt.com。感谢您购买 NZXT 产品。有关 NZXT 的更多信息,请造访我们的在线网站。NZXT 网站：NZXT.com

支援和服務

如果在使用NZXT 產品的過程中有遇到任何問題或疑問，歡迎聯繫 service@nzxt.com， 並請提供問題的詳細敘述及購買證明。您可以透過 support.nzxt.com 查詢更換部件。如有任何意見或建議，歡迎來信與設計團隊聯繫 designer@nzxt.com。最後，感謝您購買 NZXT 產品。有關 NZXT 的更多信息，請訪問我們的網站。NZXT 網站：NZXT.com

3.3 REGULATIONS

Points de collecte sur www.quefairedemesdechets.fr

This lighting kit is tested to comply with FCC standard, Australian standard and EU EMC Directive (2014/30/EU)

WARNING

This device complies with Part 15 of the FCC Rules. Operation is subject to the following two conditions: (1) this device may not cause harmful interference, and (2) this device must accept any interference received, including interference that may cause undesired operation.

3.4 REVISION HISTORY

Version 1.0, 2022/07/29