NZXT

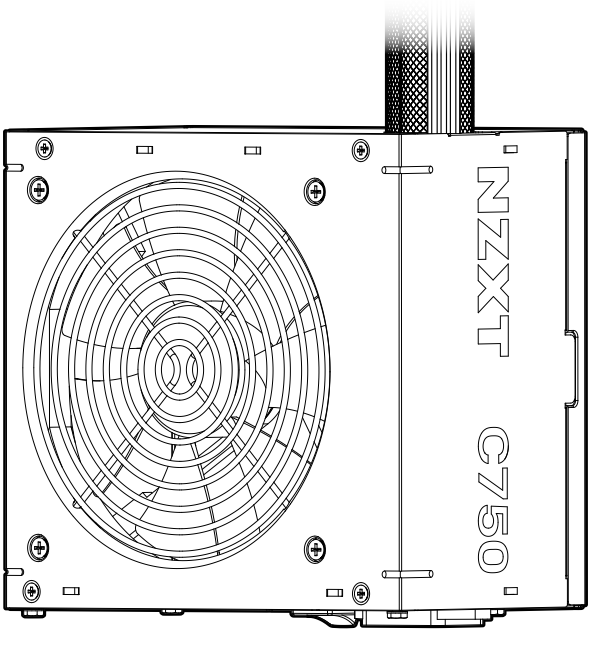

C750 BRONZE

750 WATT 80 PLUS BRONZE NON MODULAR PSU

80 PLUS BRONZE

TABLE OF CONTENTS

VERSION 1.0, 2023/02/23

COMPONENT LIST 01

INSTALLATION 03

SPECIFICATIONS 09

NZXT GLOBAL WARRANTY POLICY 19

REGULATORY STATEMENT 22

限用物质及元素列表 / 限用物質及元素清單 29

SUPPORT AND SERVICE 31

COMPONENT LIST

LISTA DE COMPONENTES
LISTE DES COMPOSANTS
KOMPONENTENLISTE
ELENCO DEI COMPONENTI
LISTA DE COMPONENTES

구성품 목록
部品リスト
零件表
零件表

A C750 Bronze

x1

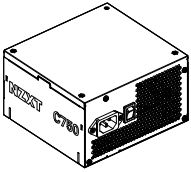

A-1 24-pin(20+4) ATX Cable

x1

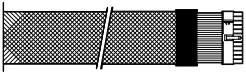

A-2 8-pin(4+4) CPU Cable

x2

A-3 8-pin(6+2) PCIe Cable (2 Connectors)

x1

A-4 SATA Cable (4 Connectors)

x1

A-5 Peripheral power (4 Connectors)

x1

B Mounting Screws

x4

C AC Power Cord

x1

A . Fuente de alimentación C750
A-1 . Cable ATX de 24 pines (20+4)
A-2 . Cable de CPU de 8 pines (4+4)
A-3 . Cable PCIe de 8 pines (6+2) (2 conectores)
A-4 . Alimentación SATA (4 conectores)
A-5 . Periféricos (4 conectores)
B . Tornillos de montaje
C . Cable de alimentación de CA

A . Bloc d'alimentation C750
A-1 . Câble d'ATX 24 broches (20+4)
A-2 . Câble du processeur 8 broches (4+4)
A-3 . Câble PCI-e 8 broches (6+2) (2 connecteurs)
A-4 . Alimentation SATA (4 connecteurs)
A-5 . Périphériques (4 connecteurs)
B . Vis de fixation
C . Câble d'alimentation CA

A . C750 PSU
A-1 . ATX-Kabel 24 Pin (20+4)
A-2 . CPU-Kabel 8 Pin (4+4)
A-3 . PCI-e-Kabel 8 Pin (6+2) (2 Anschlüsse)
A-4 . SATA-Stromanschluss (4 Anschlüsse)
A-5 . Peripheriegeräte (4 Anschlüsse)
B . Befestigungsschrauben
C . Netzkabel

A . PSU C750
A-1 . Cavo ATX 24 pin (20+4)
A-2 . Cavo per CPU 8 pin (4+4)
A-3 . Cavo PCI-e 8 pin (6+2) (2 Connettori)
A-4 . Alimentazione SATA (4 Connettori)
A-5 . Periferiche (4 Connettori)
B . Viti di montaggio
C . Cavo di alimentazione CA

A . Fonte de alimentação C750
A-1 . Cabo ATX de 24 pinos (20+4)
A-2 . Cabo de CPU de 8 pinos (4+4)
A-3 . Cabo PCI-E de 8 pinos (6+2) (2 conectores)
A-4 . Alimentação SATA (4 conectores)
A-5 . Periféricos (4 conectores)
B . Quatro parafusos de montagem
C . Um cabo de alimentação CA

A . C750 PSU
A-1 . 24핀 (20+4) ATX 케이블
A-2 . 8핀 (4+4) CPU 케이블
A-3 . 8핀 (6+2) PCI-e 케이블 (커넥터 2개)
A-4 . SATA 전원 (커넥터 4개)
A-5 . 주변장치 (커넥터 4개)
B . Tornillos de montaje
C . Cable de alimentación de CA

A . C750 PSU
A-1 . 24ピン (20+4) ATXケーブル
A-2 . 8ピン (4+4) CPUケーブル
A-3 . 8ピン (6+2) PCI-eケーブル (2コネクタ)
A-4 . SATA電源 (4コネクタ)
A-5 . 周辺機器 (4コネクタ)
B . 取り付けネジ
C . AC 電源コード

A . C750 PSU
A-1 . 24 针 (20+4) ATX 电缆
A-2 . 8 针 (4+4) CPU 电缆
A-3 . 8 针 (6+2) PCI-e 电缆 (2 个接头)
A-4 . SATA 电源接口 (4 个接头)
A-5 . 外设连接线 (4 个接头)
B . 安装螺钉
C . AC 电源线

A . C750 PSU
A-1 . 24 針 (20+4) ATX 電纜
A-2 . 8 針 (4+4) CPU 電纜
A-3 . 8 針 (6+2) PCI-e 電纜 (2 個接頭)
A-4 . SATA 電源連接器 (4 個接頭)
A-5 . 周邊纜線 (4 個接頭)
B . 安裝螺絲
C . AC 電源線

INSTALLATION

INSTALACIÓN
INSTALLATION
INSTALLIEREN
INSTALLAZIONE
INSTALAÇÃO

설치
取り付け
安装
安裝

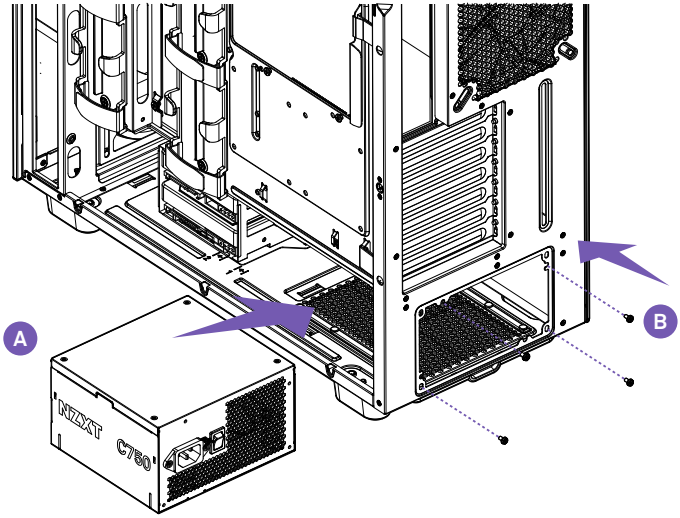

STEP 1

Install the power supply into the case using the provided screws.
Instale la fuente de alimentación en la caja utilizando los tornillos que se suministran.
Installez le bloc d'alimentation dans le boîtier à l'aide des vis fournies.
Montieren Sie das Netzteil unter Verwendung der Schrauben aus dem Lieferumfang im Gehäuse.
Installare l'alimentatore nel case utilizzando le viti in dotazione.
Instale a fonte de alimentação no gabinete usando os parafusos fornecidos.
제공된 나사를 사용하여 파워 서플라이를 케이스에 설치합니다.
付属のネジを使用してケースに電源を取り付けます。
使用随附的螺钉将电源安装到机箱中。
使用隨附的螺絲，在機殼中安裝電源供應器。

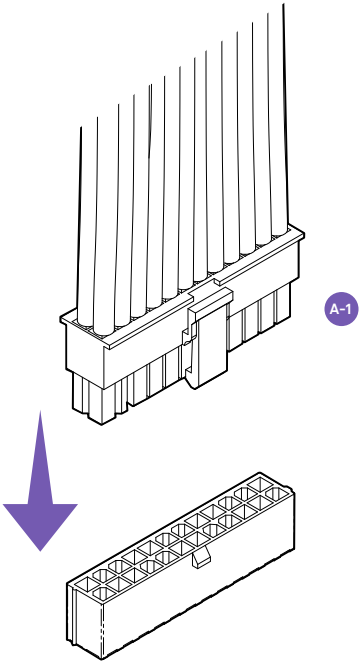

STEP 2

Connect the 20+4-pin power to the motherboard.
Conecte la alimentación de 20+4 pines a la placa base.
Branchez le connecteur à 20+4 broches sur la carte mère.
Schließen Sie das 20+4-polige Netzkabel an das Mainboard an.
Collegare l'alimentazione a 20+4 pin alla scheda madre.
Conecte a alimentação de 20+4 pinos à placa-mãe.
20+4 핀 파워를 마더보드에 연결합니다.
20+4 ピン電源用コネクタをマザーボードに接続します。
将 20+4 针电源连接到主板。
將 20+4 針腳電源線接到主機板。

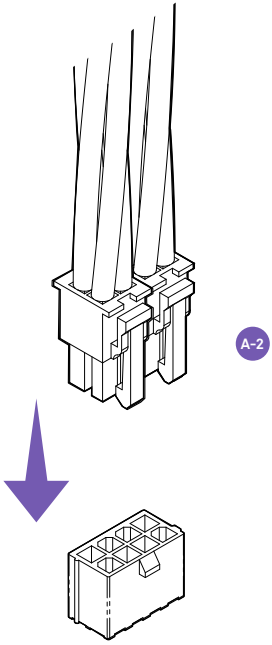

STEP 3

Connect the 4+4-pin CPU power.
Conecte la alimentación de CPU de 4+4 pines.
Branchez le(s) connecteur(s) d'alimentation processeur à 4+4 broches.
Schließen Sie das 4+4-polige CPU-Kabel an.
Collegare l'alimentazione CPU a 4+4 pin.
Conecte a alimentação da CPU de 4+4 pinos.
4+4 핀 CPU 전원을 연결합니다.
4+4 ピン CPU 電源用コネクタを接続します。
连接 4+4 针 CPU 电源。
接上 4+4 針腳 CPU 電源線。

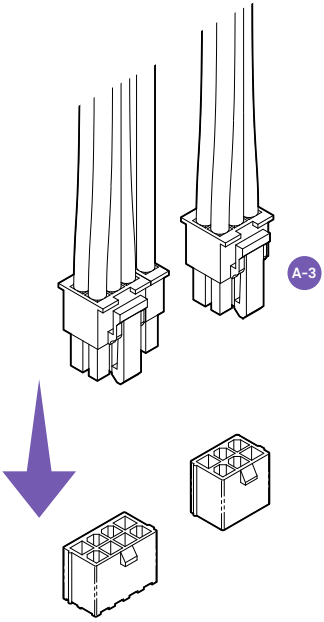

STEP 4

Connect the PCI-E power to your graphics card as required.
Conecte la alimentación de PCI-E a su tarjeta gráfica según sea necesario.
Branchez le(s) connecteur(s) d'alimentation PCI-E à votre carte graphique, en fonction de vos besoins.
Verbinden Sie ggf. das PCI-E-Kabel mit der Grafikkarte.
Collegare l'alimentazione PCI-E alla scheda grafica secondo la configurazione in uso.
Conecte a alimentação PCI-E às suas placas gráficas conforme necessário.
요구에 따라 PCI-E 전원을 그래픽 카드에 연결합니다.
必要に応じて PCI-E 電源用コネクタをグラフィックスカードに接続します。
按要求将 PCI-E 电源连接到显卡。
如有需要，將 PCI-E 電源線接到顯示卡。

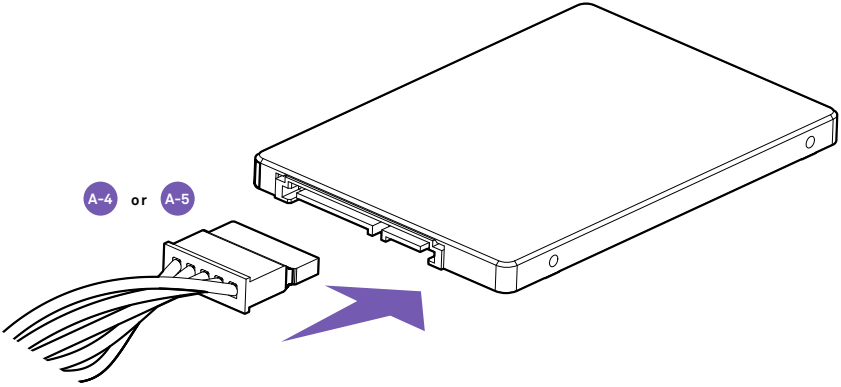

STEP 5

Connect the SATA and peripheral power as needed.
Conecte la alimentación periférica y de SATA según sea necesario.
Branchez les connecteurs SATA et périphériques, en fonction de vos besoins.
Schließen Sie SATA- und Peripheriekabel nach Bedarf an.
Collegare l'alimentazione SATA e per le periferiche secondo la configurazione in uso.
Conecte as alimentações SATA e para periféricos conforme necessário.
필요한 경우 SATA 및 주변기기 전원을 연결합니다.
必要に応じて SATA およびペリフェラル電源用コネクタを接続します。
按需连接 SATA 和外围设备电源。
如有需要，接上 SATA 和周邊設備電源線。

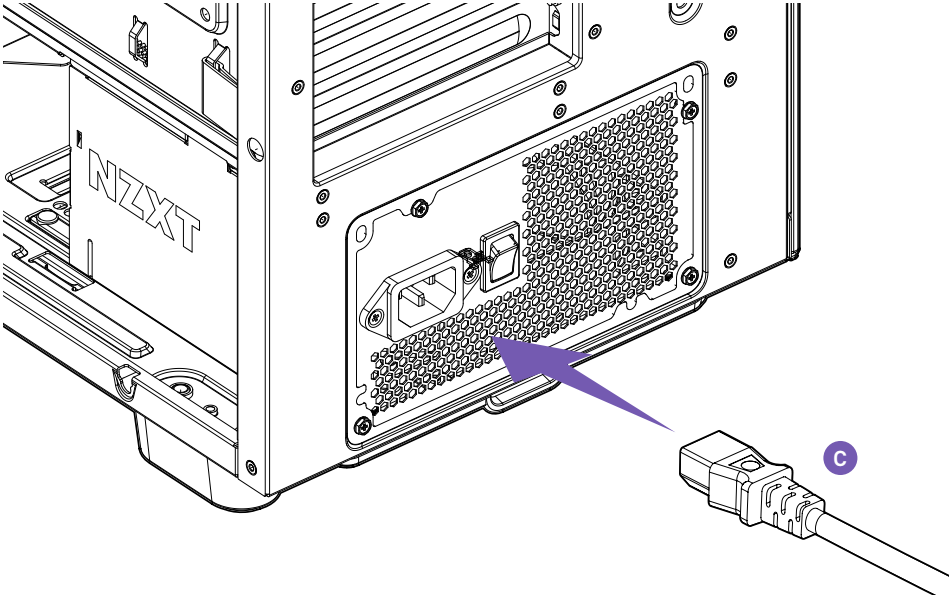

STEP 7

Connect the AC power cord to the wall and turn on the power switch.
Conecte el cable de alimentación de CA a la pared y encienda el interruptor.
Branchez le câble d'alimentation CA à la prise murale et mettez le bloc d'alimentation sous tension.
Verbinden Sie das Netzkabel mit einer Steckdose und schalten Sie das Gerät ein.
Collegare il cavo di alimentazione CA alla presa elettrica a parete e accendere l'interruttore dell'alimentazione.
Conecte o cabo de alimentação CA à tomada e ligue o botão de alimentação.
AC전원 코드를 벽 콘센트에 연결한 다음 전원 스위치를 켭니다.
AC電源コードをコンセントに接続し、電源スイッチをオンにします。
将交流电源线连接到机箱壁并打开电源开关。
將 AC 電源線插到牆上插座，打開電源開關。

SPECIFICATIONS

ESPECIFICACIONES
SPÉCIFICATIONS
TECHNISCHE DATEN
SPECIFICHE
ESPECIFICAÇÕES

사양
仕様
规格
規格

C750 Bronze					
Model Number	PA-7B2BB/PS-2202				
Dimensions	150 x 140 x 86mm				
Material(s)	Steel, PCB and plastic				
Compliance Standard	ATX12V v2.53 / EPS12V v2.92				
PF Correction	Active @ 0.96				
AC Input Rating	100V-240Vac 10A-5A 50Hz-60Hz				
DC Output Rating					
DC Output	+3.3V	+5V	+12V	-12V	5Vsb
Max Load	20A	20A	62.5A	0.3A	2.5A
Max Output Power	120W		750W	3.6W	12.5W
Total Power	750W				
Fan Spec					
Dimensions	120 x 120 x 25 mm				
Rated Speed	2400 ± 10% RPM				
Airflow	64.4 CFM (Tpy.)				
Noise Value	39.92 dBA max				
Bearing	Fluid Dynamic Bearing (FDB)				
Regulation & Certification	FCC, Canada, CE, CB(IEC 62368-1), UKCA, CCC, BSMI, BIS				
Hazardous Materials	Taiwan and China RoHS Table, CP65				
Protections	OVP (Over Voltage Protection), UVP (Under Voltage Protection), SCP (Short Circuit Protection), OTP (Over Temp Protection), OPP (Over Power Protection), OCP (Over Current Protection)				
Operation Temperature	0 to 40°C				
Energy Efficiency	80 Plus Bronze				
	10% loading: 86.2% @115Vac				
	20% loading: 88.97% @115Vac				
	50% loading: 88.7% @115Vac				
	100% loading: 83.2% @115Vac				
MTBF	100,000 hours				
Included Cables	24-pin ATX power: 600mm, Nylon sleeving				
	4+4-pin CPU power: 700mm, Nylon sleeving				
	6+2-pin PCIe power: 650 + 150mm, Nylon sleeving				
	SATA power: 500 + 150 mm				
	Peripherals: 500 + 150 mm				
Warranty	3 Years				

SPECIFICATIONS

ESPECIFICACIONES
SPÉCIFICATIONS
TECHNISCHE DATEN
SPECIFICHE
ESPECIFICAÇÕES

사양
仕様
规格
規格

C750 Bronze					
N.o de modelo	PA-7B2BB / PS-2202				
Dimensiones	150 x 140 x 86mm				
Materiales	Acero, PCB y plástico				
Conforme con estándares	ATX12V v2.53 / EPS12V v2.92				
Corrección del factor de potencia	Activa a 0,96				
Valores nominales de entrada de CA	100V-240Vac 10A-5A 50Hz-60Hz				
Valores nominales de salida de CC					
Salida CC	+3.3V	+5V	+12V	-12V	5Vsb
Carga máx.	20A	20A	62.5A	0.3A	2.5A
Potencia de salida máx.	120W		750W	3.6W	12.5W
Potencia total	750W				
Especificaciones del ventilador					
Dimensiones	120 x 120 x 25 mm				
Velocidad nominal	2400 ±10 % r. p. m.				
Flujo de aire	64.4 CFM (Tpy.)				
Nivel de ruido	39.92 dBA max				
Rodamiento	Rodamiento dinámico fluido (FDB)				
Certificación de seguridad	FCC, Canadá, CE, CB (IEC 62368-1), UKCA, CCC, BSMI, BIS				
Materiales peligrosos	Tabla RoHS para Taiwán y China, CP65				
Protecciones	OVP (protección frente a sobretensiones), UVP (protección frente a subtensiones) ,SCP (protección frente a cortocircuitos), OTP (protección frente a excesos de temperatura), OPP (protección frente a sobrepotencias), OCP (protección frente a sobreintensidades)				
Temperatura de funcionamiento	De 0 a 40 °C				
Eficiencia energética	80 Plus Bronze				
	86,2 % a 115 Vca				
	88,97 % a 115 Vca				
	88,7 % a 115 Vca				
	83,2 % a 115 Vca				
Tiempo medio entre fallos	100 000 horas				
Cables incluidos	Cable ATX de 24 pines pines: 600mm, funda de nailon				
	Cable de CPU de 4+4 pines: 700mm, funda de nailon				
	Cable PCIe de 6+2 pines, funda de nailon				
	Alimentation SATA: 500 + 150 mm				
	Périphériques: 500 + 150 mm				
Garantía	10 años				

SPECIFICATIONS

ESPECIFICACIONES
SPÉCIFICATIONS
TECHNISCHE DATEN
SPECIFICHE
ESPECIFICAÇÕES

사양
仕様
规格
規格

C750 Bronze					
Réf. modèle	PA-7B2BB/PS-2202				
Dimensions	150 x 140 x 86mm				
Matériau(x)	Acier, PCB et plastique				
Norme de conformité	ATX12V v2.53 / EPS12V v2.92				
Correction du FP	Actif à 0,96				
Valeur entrée CA	100V-240Vac 10A-5A 50Hz-60Hz				
Valeur sortie CC					
Sortie CC	+3.3V	+5V	+12V	-12V	5Vsb
Charge max	20A	20A	62.5A	0.3A	2.5A
Puissance de sortie max	120W		750W	3.6W	12.5W
Puissance totale	750W				
Caractéristiques du ventilateur					
Dimensions	120 x 120 x 25 mm				
Vitesse nominale	2400 ± 10 % tr/min				
Débit d'air	64,4 m³/min (typ.)				
Valeur du bruit	39,92 dBA max.				
Palier	Palier hydrodynamique (FDB)				
Certification de sécurité	FCC, Canada, CE, CB(IEC 62368-1), UKCA, CCC, BSMI, BIS				
Matériaux dangereux	Tableau RoHS Taïwan et Chine, CP65				
Protections	OVP (Over Voltage Protection ou protection contre les surtensions), UVP (Under Voltage Protection ou protection contre les sous-tensions), SCP (Short Circuit Protection ou protection contre les courts-circuits), OTP (Over Temperature Protection ou protection contre les surchauffes), OPP (Over Power Protection ou protection contre les surpuissances), OCP (Over Current Protection ou protection contre les surintensités)				
Température de fonctionnement	0 à 40 °C				
Efficacité énergétique	80 Plus Bronze				
	86,2 % à 115 V CA				
	88,97 % à 115 V CA				
	88,7 % à 115 V CA				
	83,2 % à 115 V CA				
Temps moyen entre pannes	100 000 heures				
Câbles fournis	Câble d'ATX 24 broches: 600mm, gaine en nylon				
	Câble du processeur 4+4 broches: 700mm, gaine en nylon				
	Câble PCI-e 6+2 broches: S650 + 150mm, gaine en nylon				
	Alimentation SATA: 500 + 150 mm				
	Périphériques: 500 + 150 mm				
Garantie	3 Years				

SPECIFICATIONS

ESPECIFICACIONES
SPÉCIFICATIONS
TECHNISCHE DATEN
SPECIFICHE
ESPECIFICAÇÕES

사양
仕様
规格
規格

C750 Bronze					
Modell-Nr.	PA-7B2BB/PS-2202				
Abmessungen	150 x 140 x 86mm				
Material(ien)	Steel, PCB and plastic				
Konformitätsstandard	ATX12V v2.53 / EPS12V v2.92				
Leistungsfaktorkorrekturfilter	Aktiv bei 0,96				
AC-Eingangsleistung	100V-240Vac 10A-5A 50Hz-60Hz				
DC-Ausgangsleistung					
Gleichstrom-Ausgang	+3.3V	+5V	+12V	-12V	5Vsb
Max. Last	20A	20A	62.5A	0.3A	2.5A
Max. Ausgangsleistung	120W		750W	3.6W	12.5W
Gesamtleistung	750W				
Lüfterdaten					
Abmessungen	120 x 120 x 25 mm				
Nenndrehzahl	2400 ±10 % U/min				
Volumenstrom	64,4 CFM (typ.)				
Geräuschpegel	39,92 dB(A) max				
Lager	Hydrodynamisches Gleitlager (FDB)				
Sicherheitszertifizierung	FCC, Kanada, CE, CB(IEC 62368-1), UKCA, CCC, BSMI, BIS				
Gefahrstoffe	Taiwan und China RoHS-Tabelle, CP65				
Sicherungen	OVP (Überspannungsschutz), UVP (Unterspannungsschutz), SCP (Kurzschlussschutz) OTP (Übertemperaturschutz), OPP (Überlastschutz), OCP (Überstromschutz)				
Betriebstemperatur	0 bis 40 °C				
Energieeffizienz	80 Plus Bronze				
	86,2 % bei 115 Vac				
	88,97 % bei 115 Vac				
	88,7 % bei 115 Vac				
	83,2 % bei 115 Vac				
MTBF	100.000 Stunden				
Mitgelieferte Kabel	ATX-Kabel 24 Pin: 600mm, Nylonummantelung				
	CPU-Kabel 4+4 Pin 700mm, NNylonummantelung				
	PCI-e-Kabel 6+2 Pin: 650 + 150mm, Nylonummantelung				
	SATA-Stromanschluss: 500 + 150 mm				
	Peripheriegeräte: 500 + 150 mm				
Garantie	3 Years				

SPECIFICATIONS

ESPECIFICACIONES
SPÉCIFICATIONS
TECHNISCHE DATEN
SPECIFICHE
ESPECIFICAÇÕES

사양
仕様
规格
規格

C750 Bronze					
Modello n.	PA-7B2BB/PS-2202				
Dimensioni	150 x 140 x 86mm				
Materiale/i	Acciaio, PCB e plastica				
Standard di conformità	ATX12V v2.53 / EPS12V v2.92				
Correzione PF	Attivo @0.96				
CA nominale di ingresso	100V-240Vac 10A-5A 50Hz-60Hz				
CC nominale di uscita					
CC uscita	+3.3V	+5V	+12V	-12V	5Vsb
Carico massimo	20A	20A	62.5A	0.3A	2.5A
Energia massima di uscita	120W		750W	3.6W	12.5W
Energia totale	750W				
Specifiche ventola					
Dimensioni	120 x 120 x 25 mm				
Velocità nominale	2400 ± 10% RPM				
Flusso d'aria	64.4 CFM (tip.)				
Rumore	9.92 dBA max				
Cuscinetto	Cuscinetto fluidodinamico (FDB)				
Certificazione di sicurezza	FCC, Canada, CE, CB(IEC 62368-1), UKCA, CCC, BSMI, LVD, BIS				
Materiali pericolosi	Taiwan e tabella RoHS Cina, CP65				
Protezioni	OVP (protezione da sovratensione), UVP (protezione da sottotensione), SCP (protezione da cortocircuito), OTP (protezione da sovratemperatura), OPP (protezione da sovrapotenza), OCP (protezione da sovracorrente)"				
Temperatura di funzionamento	Da 0 a 40 °C				
Efficienza energetica	80 Plus Bronze				
	86.2% @115Vac				
	88.97% @115Vac				
	88.7% @115Vac				
	83.2% @115Vac				
MTBF	100.000 ore				
Cavi inclusi	Cavo ATX 24 pin: 600mm, manicotto in nylon				
	Cavo per CPU 4+4 pin: 700mm, manicotto in nylon				
	Cabo PCI-E de 6+2 pinos: 650 + 150mm, manicotto in nylon				
	Alimentação SATA: 500 + 150 mm				
	Periféricos: 500 + 150 mm				
Garanzia	3 anni				

SPECIFICATIONS

ESPECIFICACIONES
SPÉCIFICATIONS
TECHNISCHE DATEN
SPECIFICHE
ESPECIFICAÇÕES

사양
仕様
规格
規格

C750 Bronze					
Modelo N.º	PA-7B2BB/PS-2202				
Dimensões	150 x 140 x 86mm				
Material(ais)	Aço, PCB e plástico				
Norma de conformidade	ATX12V v2.53 / EPS12V v2.92				
Correção PF	Ativa a 0,96				
Classificação de entrada CC	100V-240Vac 10A-5A 50Hz-60Hz				
Classificação de entrada CC					
Saída CC	+3.3V	+5V	+12V	-12V	5Vsb
Carga máxima	20A	20A	62.5A	0.3A	2.5A
Potência máx. de saíde	120W		750W	3.6W	12.5W
Potência total	750W				
Especificações da ventoinha					
Dimensões	120 x 120 x 25 mm				
Velocidade nominal	2400 ± 10% RPM				
Fluxo de ar	64,4 CFM (Tpa.)				
Valor do ruído	39,92 dBA máx.				
Rolamento	Rolamento Fluidodinâmico (FDB)				
Certificação de segurança	FCC, Canadá, CE, CB(IEC 62368-1), UKCA, CCC, BSMI, BIS				
Materiais perigosos	Taiwan e China RoHS Table, CP65				
Proteções	OVP (Proteção contra Sobretensão), UVP (Proteção contra Subtensão), SCP (Proteção contra Curto-circuito), OTP (Proteção contra Sobreaquecimento), OPP (Proteção contra Sobrepotência), OCP (Proteção contra Sobrecorrente)				
Temperatura de funcionamento	0 a 40 °C				
Eficiência energética	80 Plus Bronze				
	86,2% a 115Vac				
	88,97% a 115Vac				
	88,7% a 115Vac				
	83,2% a 115Vac				
MTBF (tempo médio sem falhas)	100,000 horas				
Cabos incluídos	Cabo ATX de 24 pinos: 600mm, Revestimento de nylon				
	Cabo de CPU de 4+4 pinos: 700mm, Revestimento de nylon				
	Cabo PCI-E de 6+2 pinos: 650 + 150mm, Revestimento de nylon				
	Alimentação SATA: 500 + 150 mm				
	Periféricos: 500 + 150 mm				
Garantia	3 anos				

SPECIFICATIONS

ESPECIFICACIONES
SPÉCIFICATIONS
TECHNISCHE DATEN
SPECIFICHE
ESPECIFICAÇÕES

사양
仕様
规格
規格

C750 Bronze					
모델 번호	PA-7B2BB/PS-2202				
크기	150 x 140 x 86mm				
소재	스틸 , PCB 및 플라스틱				
규정 준수 표준	ATX12V v2.53 / EPS12V v2.92				
역률개선 (PFC)	Active @ 0.96				
AC 입력 정격	100V-240Vac 10A-5A 50Hz-60Hz				
DC 출력 정격					
DC 출력	+3.3V	+5V	+12V	-12V	5Vsb
최대 부하	20A	20A	62.5A	0.3A	2.5A
최대 출력 전력	120W		750W	3.6W	12.5W
총 전력	750W				
팬 사양					
크기	120 x 120 x 25 mm				
정격속도	2400 ± 10% RPM				
풍량	64.4 CFM (Tpy.)				
소음값	최대 39.92dBA				
베어링	유체 다이나믹 베어링 (FDB)				
안전 인증	FCC, 캐나다 , CE, CB(IEC 62368-1), RCM, UKCA, CCC, BSMI, LVD, 유럽 EMKO, BIS				
위험물	대만 및 중국 RoHS Table, CP65				
보호	OVP(과전압 보호), UVP(저전압 보호), SCP(단락 보호) OTP(과온도 보호), OPP(과전원 보호), OCP(과전류 보호)				
작동 온도	0 ~ 40° C				
에너지 효율	80 Plus Bronze				
	86.2% @115Vac				
	88.97% @115Vac				
	88.7% @115Vac				
	83.2% @115Vac				
MTBF	100,000 시간				
포함된 케이블	24 핀 ATX 케이블 : 600mm, 나일론 슬리브				
	4+4 핀 CPU 케이블 : 700mm, 나일론 슬리브				
	6+2 핀 PCI-e 케이블 : 650 + 150mm, 나일론 슬리브				
	SATA 전원 : 500 + 150 mm				
	주변장치 : 500 + 150 mm				
보증	3 년				

SPECIFICATIONS

ESPECIFICACIONES
SPÉCIFICATIONS
TECHNISCHE DATEN
SPECIFICHE
ESPECIFICAÇÕES

사양
仕様
规格
規格

C750 Bronze					
モデル番号	PA-7B2BB/PS-2202				
寸法	150 x 140 x 86mm				
材質	スチール、PCB、プラスチック				
準拠基準	ATX12V v2.53 / EPS12V v2.92				
PF 補正	Active @ 0.96				
AC 入力定格	100V-240Vac 10A-5A 50Hz-60Hz				
DC 出力定格					
DC 出力	+3.3V	+5V	+12V	-12V	5Vsb
最大負荷	20A	20A	62.5A	0.3A	2.5A
最大出力電力	120W		750W	3.6W	12.5W
総電力	750W				
ファン仕様					
寸法	120 x 120 x 25 mm				
定格速度	2400 ± 10% RPM				
風量	64.4 CFM (標準値)				
ノイズ値	最大 39.92 dBA				
ベアリング	流体動圧軸受 (FDB)				
安全性認証	FCC、カナダ、CE、CB (IEC 62368-1)、UKCA、CCC、BSMI、BIS				
有害素材	台湾および中国の RoHS 表、CP65				
保護	OVP（過電圧保護）, UVP（電圧不足保護）, SCP（短絡保護） OTP（過熱保護）, OPP（過電力保護）, OCP（過電流保護）				
動作温度	0 ～ 40° C				
エネルギー効率	80 Plus Bronze				
	86.2% @115Vac				
	88.97% @115Vac				
	88.7% @115Vac				
	83.2% @115Vac				
MTBF	10 万時間				
同梱ケーブル	24 ピン ATX ケーブル : 600mm, ナイロンスリーブ				
	4+4 ピン CPU ケーブル : 700mm, ナイロンスリーブ				
	6+2 ピン PCI-e ケーブル : 650 + 150mm, ナイロンスリーブ				
	SATA 電源 : 500 + 150 mm				
	周辺機器 : 500 + 150 mm				
保証	3 年				

SPECIFICATIONS

ESPECIFICACIONES
SPÉCIFICATIONS
TECHNISCHE DATEN
SPECIFICHE
ESPECIFICAÇÕES

사양
仕様
规格
规格

C750 Bronze					
型号	PA-7B2BB/PS-2202				
尺寸	150 x 140 x 86mm				
材质	钢、PCB 和塑料				
合规标准	ATX12V v2.53 / EPS12V v2.92				
PF 校正	有源 @ 0.96				
AC 输入额定值	100V-240Vac 10A-5A 50Hz-60Hz				
DC 输出额定值					
DC 输出	+3.3V	+5V	+12V	-12V	5Vsb
最大负载	20A	20A	62.5A	0.3A	2.5A
最大输出功率	120W		750W	3.6W	12.5W
最大输出功率	750W				
风扇参数					
尺寸	120 x 120 x 25 mm				
额定转速	2400 ± 10% RPM				
气流	64.4 CFM（典型值）				
噪声值	最大 39.92 dBA				
轴承	流体动力轴承 (FDB)				
安全认证	FCC, Canada, CE, CB(IEC 62368-1), UKCA, CCC, BSMI, BIS				
有害物质	台湾和中国大陆 RoHS 表 · CP65				
保护	OVP（过电压保护）, UVP（欠电压保护）, SCP（短路保护） OTP（过温保护）, OPP（过功率保护）, OCP（过流保护）				
工作温度	0 ~ 40° C				
能效	80 Plus Bronze				
	86.2% @115Vac				
	88.97% @115Vac				
	88.7% @115Vac				
	83.2% @115Vac				
MTBF	100,000 小时				
所含线缆	24 针 ATX 电缆 : 600mm, 尼龙套管				
	4+4 针 CPU 电缆 : 700mm, 尼龙套管				
	6+2 针 PCI-e 电缆 : 650 + 150mm, 尼龙套管				
	SATA 电源接口 : 500 + 150 mm				
	外设连接线 : 500 + 150 mm				
保修	3 年				

SPECIFICATIONS

ESPECIFICACIONES
SPÉCIFICATIONS
TECHNISCHE DATEN
SPECIFICHE
ESPECIFICAÇÕES

사양
仕様
规格
規格

C750 Bronze					
型號	PA-7B2BB/PS-2202				
尺寸	150 x 140 x 86mm				
材質	鋼、PCB 和塑料				
合規標準	ATX12V v2.53 / EPS12V v2.92				
PF 校正	Active @ 0.96				
AC 輸入額定值	100V-240Vac 10A-5A 50Hz-60Hz				
DC 輸出額定值					
DC 輸出	+3.3V	+5V	+12V	-12V	5Vsb
最大負載	20A	20A	62.5A	0.3A	2.5A
最大輸出功率	120W		750W	3.6W	12.5W
總功率	750W				
風扇參數					
尺寸	120 x 120 x 25 mm				
額定轉速	2400 ± 10% RPM				
氣流	64.4 CFM（典型值）				
噪聲值	最大 39.92 dBA				
軸承	流體動力軸承 (FDB)				
安全認證	FCC, Canada, CE, CB(IEC 62368-1), RCM, UKCA, CCC, BSMI, LVD, Nordic EMKO, BIS				
有害物質	台灣和中國大陸 RoHS 表．CP65				
保護	OVP（過電壓保護）, UVP（欠電壓保護）, SCP（短路保護） OTP（過溫保護）, OPP（過功率保護）, OCP（過流保護）"				
工作溫度	0 到 40° C				
能效	80 Plus Bronze				
	86.2% @115Vac				
	88.97% @115Vac				
	88.7% @115Vac				
	83.2% @115Vac				
MTBF	100,000 小時				
所含線纜	24-pin ATX power: 600mm, 尼龍套管				
	4+4-pin CPU power: 700mm, 尼龍套管				
	6+2-pin PCIe power: 650 + 150mm, 尼龍套管				
	SATA power: 500 + 150 mm				
	Peripherals: 500 + 150 mm				
保修	3 年				

NZXT GLOBAL WARRANTY POLICY

This NZXT Global Warranty Policy governs the sale of products by NZXT to you.

I. WARRANTY LENGTH

New NZXT Product	Warranty Length
C750 Bronze	3 Years

Any replacement product will be covered under warranty for the remainder of the warranty period or thirty days, whichever is longer. Proof of purchase is required for warranty service.

II. WHO IS PROTECTED

The Warranty covers only NZXT products purchased by the original consumer.

III. WHAT IS AND IS NOT COVERED

Please note that our warranty is not an unconditional guarantee. If the product, in NZXT's reasonable opinion, malfunctions within the warranty period, NZXT will provide you at its sole discretion with a repaired or replacement product, either new or refurbished, with a similar function that is equal or greater in value depending on supply. Our warranty does not cover the following:

- any product or serial number/warranty sticker modification applied without permission from NZXT;
- any damage that is not a manufacturing defect;
- damage, deterioration or malfunction resulting from: accident, abuse, misuse, neglect, fire, water, lightning, or other acts of nature, unauthorized product modification or failure to follow instructions included with the product;
- improper installation, unauthorized alterations or modifications, or repair or attempted repair by anyone not authorized by NZXT;
- shipping or transport damage (claims must be made with the carrier);
- normal wear and tear.

NZXT does not warrant that this product will meet your requirements. It is your responsibility to determine the suitability of this product for your purpose. For NZXT Store orders, we cover two way return shipping for all exchanges and returns. For all other authorized dealers, NZXT Support does not cover return shipping and only covers one way shipping from NZXT back to the end user for exchanges. Two way expedited shipping is provided for all PSUs covered under the Less Than Three program, indiscriminate of purchase location, provided the location is an approved NZXT reseller.

IV. EXCLUSION OF DAMAGES (DISCLAIMER)

NZXT's sole obligation and liability under this warranty is limited to the repair or replacement of a defective product with either a new or refurbished product with a similar function that is equal or greater in value at our option. NZXT shall not, in any event, be liable for any incidental or consequential damage, including but not limited to damages resulting from interruption of service and loss of data, business, or for liability in tort relating to this product or resulting from its use or possession.

V. LIMITATIONS OF IMPLIED WARRANTIES

There are no other warranties, expressed or implied, including but not limited to those of merchantability or fitness for a particular purpose. The duration of implied warranties is limited to the warranty length specified in Paragraph I.

VI. TO OBTAIN TECHNICAL SUPPORT

If you have already referenced your product owner's manual and still need help, you may contact us by phone at +1 (800) 228-9395, by email at service@nzxt.com, or visit the NZXT Support site at nzxt.com/customer-support.

VII. HOW TO OBTAIN A WARRANTY SERVICE FROM NZXT

To receive a warranty service for your product when purchased directly from NZXT, you must submit a request via the NZXT Support site outlining the problem. If a technician deems the product defective or requiring testing, you will be required to provide a copy of your proof of purchase, which will enable you to submit a Return Merchandise Authorization "RMA" request.

Once approved, you`ll receive an RMA number, upon which you will be asked to ship the defective item back to NZXT with the RMA number clearly marked or labelled on the package. NZXT recommends that appropriate measures are taken to safeguard the product from damage during shipping.

VIII. APPLICABLE LAW AND ADDITIONAL LEGAL RIGHTS FOR CONSUMERS

This warranty gives you specific legal rights. These conditions are governed and construed in accordance with the laws of California (with exception of its conflict of law provisions), and the application of the United Nations Convention of Contracts for the International Sale of Goods is expressly excluded. The non-exclusive jurisdiction of the courts of California is agreed, which means that you may bring a claim to enforce your consumer protection rights in connection with this Global Warranty in the country which you have your habitual residence where you may have additional rights. These rights may vary.

For original consumers who are covered by consumer protection laws or regulations in their country, state, or province of purchase or, if different, their country, state, or province of residence, the benefits conferred by this warranty are in addition to all rights and remedies conveyed by such consumer protection laws and regulations. To the extent that liability under such consumer laws can be limited, NZXT's liability is limited, and its sole option, to repair or replacement, either new or refurbished, with a similar function that is equal or greater in value depending on supply.

In the United Kingdom:

- For NZXT products sold to customers in the UK, during the expected lifespan of your product your legal rights entitle you to the following:
  - Up to 30 days: if your goods are faulty, then you can get an immediate refund.
  - Up to six months: if your goods can't be repaired or replaced, then you're entitled to a full refund, in most cases.
  - Up to six years: if your goods do not last a reasonable length of time you may be entitled to some money back.
- If the person seeking to rely on the guarantee is not the original consumer, the NZXT Warranty will cover the product in relation to that person provided that they are able to provide proof of the transfer of the benefit of the guarantee from the original consumer.
- The implied warranties under the Consumer Rights Act 2015 says that your goods must be as described, fit for all purposes for which such goods are usually supplied, and of satisfactory quality.

In the EU:

- If you are a consumer and have your habitual residence in the EU, you additionally enjoy the protection afforded to you by provisions that cannot be derogated from by agreement by virtue of the law where you have your habitual residence.

IX. WARRANTY SERVICE FROM RESELLERS

In the event that a warranty service is sought, you must provide proof of purchase (store receipt or invoice) in order to receive the service and if deemed necessary, repair or replacement product.

In North America:

Within the first 60 days after purchase, please return your product (or for power supplies installed within our enclosures, just the failed power supply) to your dealer or reseller for a replacement. If the product is still within warranty and you can no longer return it to your dealer, please contact NZXT Customer Support (see above) for assistance and instructions. NZXT will not accept returns without prior approval and an RMA number.

In Europe:

Within the first year after purchase, please return your product (or for power supplies installed within our enclosures, just the failed power supply) to your dealer or reseller for a replacement. If the product is still within warranty and you can no longer return it to your dealer, please contact NZXT Customer Support (see above) for assistance and instructions. NZXT will not accept returns without prior approval.

In Australasia:

Within the first two years after purchase, please return your product (or for power supplies installed within our enclosures, just the failed power supply) to your dealer or reseller for a replacement. If the product is still within warranty and you can no longer return it to your dealer, please contact NZXT Customer Support (see above) for assistance and instructions. NZXT will not accept returns without prior approval.

The cost of shipping will be borne at the first instance by you; however, if the purchased item is defective, NZXT will reimburse reasonable postage or transportation of costs.

Outside North America, Europe, and Australasia:

If your product needs to be returned within the warranty period, please contact the retailer or distributor from whom you purchased the product.

X. NZXT.COM STORE RETURNS/EXCHANGE POLICY

Eligible products under this NZXT Warranty qualify for a full refund or exchange only with an authorized RMA number and if the item is returned to the NZXT.com store inventory within 30 days of purchase. Returns are not allowed beyond 30 days of the purchase date. The NZXT.com Store reserves the right to deny any return or exchange. Refunds will be credited to the original method of payment. To initiate a return, simply submit a request via NZXT support site.

- Visit nzxt.com/warranty and support.nzxt.com for information on warranty coverage and service.
- Visite el sitio Web nzxt.com/warranty y support.nzxt.com para obtener información sobre la cobertura y el servicio de la garantía.
- Visitez nzxt.com/warranty et support.nzxt.com pour les informations de la couverture de la garantie et du service.
- Informationen zu Geltungsbereich und Service der Garantie finden Sie unter support.nzxt.com und nzxt.com/warranty.
- Visitare il sito nzxt.com/warranty e support.nzxt.com per informazioni sulla copertura e sul servizio della garanzia.
- Visite nzxt.com/warranty e support.nzxt.com para obter informações sobre a cobertura da garantia e assistência.
- 제품 보증 범위와 서비스 정보를 확인하시려면 nzxt.com/warranty 또는 support.nzxt.com 을 방문해 주시기 바랍니다.
- 保証範囲およびサービスに関する情報については、support.nzxt.com と nzxt.com/warranty にアクセスしてください。
- 请造访 nzxt.com/warranty 和 support.nzxt.com 了解保修范围和服务的信息。
- 請訪問 nzxt.com/warranty 和 support.nzxt.com 了解產品保固範圍和更多服務訊息。

NZXT, Inc. | 15736 E. Valley Blvd, City of Industry, CA 91744, USA
NZXT Europe GmbH | Ammerthalstrasse 32 Kirchheim bei Muenchen 85551, Germany
NZXT UK Ltd. | First Floor 5 Fleet Place London EC4M 7RD, GB United Kingdom
+1 (800) 228-9395 / service@nzxt.com / nzxt.com

REGULATORY STATEMENT

UKCA Declaration of Conformity

The object of the declaration described above is in conformity with the relevant UK harmonization legislation:

- Electromagnetic Compatibility Regulations 2016
- Electrical Equipment (Safety) Regulations 2016
- The Ecodesign for Energy-Related Products and Energy Information (Amendment) (EU Exit) Regulations 2019
- The Restriction of the Use of Certain Hazardous Substances in Electrical and Electronic Equipment Regulations 2012

RoHS Statement

This product is compliant to implemented RoHS (Restriction of Hazardous Substances) type regulations worldwide, including but not limited to China, India, Korea and European Union.

WEEE

Disposal of Waste Electrical and Electronic Equipment and/or Battery by users in private households in the European Union.

This symbol on the product or on the packaging indicates that this can not be disposed of as household waste. You must dispose of your waste equipment and/or battery by handling it over to the applicable take-back scheme for the recycling of electrical and electronic equipment and/or battery. For more information about recycling of this equipment and/or battery, please contact your city office, the shop where you purchased the equipment or your household waste disposal service. The recycling of materials will help to conserve natural resources and ensure that it is recycled in a manner that protects human health and environment.

Recycling information: See http://www.benq.com/support/recycle for details.

EU REACH SVHC Disclosure on Candidate List

REACH (Registration, Evaluation, Authorization and Restriction of Chemicals, EC 1907/2006) is the European Union's (EU) chemical substances regulatory framework. REACH requires NZXT Inc. to provide customers with sufficient information on Substances of Very High Concern (SVHC) contained in products in concentration above 0.1% weight by weight (w/w) to allow safe use of the product.

Declaration of Conformity

The device complies with the requirements set out in the Council Directives relevant Union harmonisation legislation:

● EMC Directive 2014/30/EU ● LVD Directive 2014/35/EU ● RoHS Directive 2011/65/EU & (EU) 2015/863

Déclaration de Conformité

L'appareil est conforme aux exigences définies dans les directives du Conseil relatives à la législation d'harmonisation de l'Union:

● Directive EMC 2014/30/UE ● Directive LVD 2014/35/UE ● Directive RoHS 2011/65/UE et (UE) 2015/863

DECLARACIÓN DE CONFORMIDAD

El dispositivo cumple los requisitos impuestos en las directivas del Consejo relativas a la legislación de armonización de la Unión Europea:

● Directive EMC 2014/30/UE ● Directive LVD 2014/35/UE ● Directive RoHS 2011/65/UE et (UE) 2015/863

DICHIARAZIONE DI CONFORMITÀ

Il dispositivo è conforme con i requisiti definiti nelle Direttive del Consiglio relative alla Norma sull'armonizzazione dell'Unione:

● Direttiva EMC 2014/30/UE ● Direttiva LVD 2014/35/UE ● Direttiva RoHS 2011/65/UE e (UE) 2015/863

KONFORMITÄTSERKLÄRUNG

Das Gerät entspricht den Anforderungen der entsprechenden EU-Harmonisierungsrichtlinien des Rates:

- EMV-Richtlinie 2014/30/EU
- LVD-Richtlinie 2014/35/EU
- RoHS-Richtlinie 2011/65/EU & (EU) 2015/863

OŚWIADCZENIE ZGODNOŚCI

Urządzenie jest zgodne z wymaganiami określonymi w odpowiednich unijnych Dyrektywach harmonizacyjnych Rady:

- Dyrektywa EMC 2014/30/UE
- Dyrektywa niskonapięciowa 2014/35/UE
- Dyrektywa RoHS 2011/65/UE i (UE) 2015/863

KONFORMITETSDEKLARATION

Enheten uppfyller kraven som anges i Rådets direktivs relevanta harmoniseringslagstiftning för Europeiska unionen:

- EMC-direktivet 2014/30/EU
- LVD-direktivet 2014/35/EU
- RoHS-direktiv 2011/65/EU & (EU) 2015/863

VERKLARING VAN OVEREENSTEMMING

Het apparaat voldoet aan de vereisten van de relevante richtlijnen van de Raad met betrekking tot harmonisatiewetgeving in de Unie:

- EMC-richtlijn 2014/30/EU
- LVD-richtlijn 2014/35/EU
- RoHS-richtlijn 2011/65/EU & (EU) 2015/863

APPLIED SAFETY ITEMS AND REGULATIONS ON C SERIES PSU

ITEMS/REGULATIONS	WARRANTY LENGTH FOR PARTS
FCC	FCC Part 15 Subpart B Class B:2021
ICES	ICES-003 Issue 7 Class B
CE	EN55032:2015+A11:2020
	EN IEC 61000-3-2:2019
	EN 61000-3-3:2013+A1:2019
	EN55035:2017+A11:2020
TUV	IEC 62368-1:2014; IEC 60950-1:2005+A1+A2
CCC	GB 4943.1-2011(GB 4943.1-2022);
	GB/T 9254.1-2021;GB 17625.1-2012;
BSMI	CNS15598-1、CNS15936、CNS 15663
RCM	AS/NSZ 62368.1:2018
	EN 55032:2015+A11:2020
KC	KC 62368-1 · KS C 988.972, KS C 988.975

FCC, ISED Statement

This device complies with Part 15 of the FCC Rules. Operation is subject to the following two conditions:
(1) This device may not cause harmful interference, and (2) this device must accept any interference received, including interference that may cause undesired operation. CAN ICES-003(B) / NMB-003(B)

REGULATORY STATEMENT

IMPORTANT SAFETY INFORMATION
CAUTION ELECTRIC SHOCK HAZARD!

1. Install in accordance with all manufacturer instructions and safety warnings.
   Failure to do so may result in damage to your power supply or system, and may causes serious injury or death.
2. High voltages are present in the power supply.
   Do not open the power supply case or attempt to repair the power supply; there are no user-serviceable components.
3. This product is designed for indoor use only.
4. Do not use the power supply near water, or in high temperature or high humidity environments.
5. Do not install near any heat sources such as radiators, heat registers, stoves, or other apparatus that produce heat.
6. Do not insert any objects into the open ventilation or fan grill area of the power supply.
7. Do not modify the cables and/or connectors included with this power supply.
8. If this power supply uses modular cables, use only manufacturer supplied cables.
9. The 24-pin main power connector has a detachable 4-pin connector.
   This 4-pin connector is not a P4 or ATX 12V connector.
   Do not force this cable in the P4 or ATX +12V socket on motherboard.
10. Failure to comply with any manufacturer instructions and/or any of these safety instructions will immediately void all warranties and guarantees.

INFORMACIÓN IMPORTANTE SOBRE SEGURIDAD
¡PELIGRO DE DESCARGA ELÉCTRICA!

1. Siga todas las advertencias de seguridad e instrucciones del fabricante durante la instalación.
   De lo contrario, podría dañar el sistema o la fuente de alimentación, y provocar lesiones graves o la muerte.
2. En la fuente de alimentación existen tensiones elevadas.
   No abra la caja de la fuente de alimentación ni intente repararla, no contiene piezas que el usuario pueda reparar.
3. Este producto está diseñado para su uso en interiores.
4. No utilice la fuente de alimentación cerca de agua ni en entornos muy húmedos o con temperaturas altas.
5. No instale la unidad cerca de fuentes de calor tales como radiadores, medidores de temperatura, estufas u otros aparatos que produzcan calor.
6. No introduzca ningún objeto en el área del ventilador o ventilación abierta de la fuente de alimentación.
7. No modifique los cables y/o conectores incluidos con esta fuente de alimentación.
8. Si esta fuente de alimentación utiliza cables modulares, utilice solo cables proporcionados por el fabricante.
9. El conector de alimentación principal de 24 pines dispone de un conector de 4 pines extraíble.
   Este conector de 4 pines no es un conector P4 o ATX de 12 V.
   No fuerce este cable en el enchufe P4 o ATX +12 V de la placa base.
10. El incumplimiento de cualquiera de las instrucciones del fabricante o de estas instrucciones de seguridad anulará de inmediato todas las garantías.

REGULATORY STATEMENT

INFORMATIONS IMPORTANTES DE SÉCURITÉ
ATTENTION : RISQUE D'ÉLECTROCUTION!

1. L'installation doit être effectuée conformément aux instructions du fabricant et aux avertissements de sécurité.
   Une installation non conforme peut entraîner des dommages à votre bloc d'alimentation ou système électrique, et entraîner des blessures graves, voire la mort.
2. Le bloc d'alimentation contient des tensions élevées.
   N'ouvrez pas le boîtier du bloc d'alimentation et ne tentez pas de le réparer ; aucun de ses composants n'est réparable.
3. Ce produit est conçu pour une utilisation en intérieur uniquement.
4. N'utilisez pas le bloc d'alimentation à proximité d'eau, à des températures élevées ou dans des environnements très humides.
5. Ne l'installez pas à proximité de sources de chaleur telles que radiateurs, registres, poêles ou autres appareils produisant de la chaleur.
6. N'insérez aucun objet dans l'orifice ou la grille de ventilation du bloc d'alimentation.
7. Ne modifiez pas les câbles et/ou connecteurs inclus avec ce bloc d'alimentation.
8. Si ce bloc d'alimentation utilise des câbles modulaires, utilisez uniquement ceux fournis par le fabricant.
9. Le connecteur d'alimentation principal à 24 broches est équipé d'un connecteur amovible à 4 broches.
   Ce connecteur à 4 broches n'est pas un connecteur P4 ou ATX 12 V.
   Ne forcez pas ce câble dans la prise P4 ou ATX +12 V de la carte-mère.
10. Toute non conformité aux instructions du fabricant et/ou à l'une de ces consignes de sécurité aura pour conséquence l'annulation immédiate des garanties.

WICHTIGE SICHERHEITSINFORMATIONEN
ACHTUNG STROMSCHLAGGEFAHR!

1. Installieren Sie das Gerät gemäß den Anweisungen des Herstellers und den Sicherheitshinweisen.
   Andernfalls kann es zu Schäden an Ihrem Netzteil oder System und zu schweren oder tödlichen Verletzungen kommen.
2. Im Netzteil ist Hochspannung enthalten.
   Sie dürfen das Gehäuse des Netzteils weder öffnen noch zu reparieren versuchen; es beinhaltet keine Komponenten, die vom Benutzer gewartet werden können.
3. Dieses Produkt ist nur für den Gebrauch in Innenräumen vorgesehen.
4. Verwenden Sie das Netzteil nicht in der Nähe von Wasser oder bei hohen Temperaturen oder in Umgebungen mit hoher Luftfeuchtigkeit.
5. Montieren Sie das Gerät nicht neben Hitzequellen wie Heizkörpern, Wärmespeichern, Öfen oder anderen Geräten, die Wärme erzeugen.
6. Stecken Sie keine Gegenstände in die offene Belüftung oder das Lüftergitter des Netzteils.
7. Nehmen Sie keine Modifikationen an den Kabeln und/oder Steckverbindern vor, die im Lieferumfang dieses Netzteils enthalten sind.
8. Falls es sich um ein Netzteil mit modularen Kabeln handelt, dürfen Sie ausschließlich vom Hersteller bereitgestellte Kabel verwenden.
9. Der 24-polige Hauptstromanschluss ist mit einem abnehmbaren 4-poligen Steckverbinder ausgestattet.
   Dieser 4-polige Steckverbinder ist kein P4- oder ATX-12-V-Steckverbinder.
   Stecken Sie diese Kabel nicht mit Gewalt in die P4- oder ATX-12 V-Buchse des Mainboards.
10. Bei Nichteinhaltung der Anweisungen des Herstellers und/oder dieser Sicherheitshinweise erlischt die Gültigkeit von Gewährleistungen und Garantien mit sofortiger Wirkung.

REGULATORY STATEMENT

INFORMAZIONI IMPORTANTI SULLA SICUREZZA

AVVERTENZA: PERICOLO DI SCOSSE ELETTRICHE

1. Effettuare l'installazione in conformità a tutte le istruzioni del produttore e gli avvisi sulla sicurezza.
   Il mancato rispetto di questa procedura potrebbe causare danni al proprio alimentatore o sistema e potrebbe provocare lesioni gravi o anche la morte di persone.
2. Nell'alimentatore sono presenti tensioni elevate.
   Non aprire il case o la custodia dell'alimentatore, né tentare di riparare l'alimentatore; non contiene componenti riparabili o sostituibili dall'utente.
3. Il prodotto è stato progettato solo per uso interno.
4. Non usare l'alimentatore nelle vicinanze di acqua, a temperature elevate o in ambienti con umidità elevata.
5. Non installare vicino a fonti di calore quali termosifoni, valvole di regolazione del calore, stufe o altri apparecchi che producono calore.
6. Non inserire oggetti nelle fessure di ventilazione aperte o nella griglia della ventola sull'alimentatore.
7. Non modificare i cavi e/o i connettori in dotazione con questo alimentatore.
8. Se l'alimentatore utilizza cavi modulari, utilizzare solo cavi forniti dal produttore.
9. Il connettore di alimentazione principale a 24 pin è dotato di un connettore a 4 pin estraibile.
   Il connettore a 4 pin non è un connettore di tipo P4 o ATX da 12 V.
   Non forzare l'inserimento del cavo nella presa P4 o ATX a +12 V della scheda madre.
10. La mancata conformità a qualsiasi istruzione del produttore e/o a qualsiasi presente istruzione sulla sicurezza renderà immediatamente nulle tutte le garanzie.

INFORMAÇÕES IMPORTANTES DE SEGURANÇA

CUIDADO, RISCO DE CHOQUE ELÉTRICO!

1. Instale de acordo com todas as instruções do fabricante e com os avisos de segurança.
   Não fazê-lo poderá resultar em danos à fonte de alimentação ou ao sistema, isso pode causar lesões graves ou morte.
2. Há alta tensão na fonte de energia.
   Não abra a caixa da fonte de alimentação ou tente reparar a fonte de alimentação.
   Não há componentes que possam ser reparados pelo usuário.
3. Este produto foi projetado apenas para uso em ambientes internos.
4. Não use a fonte de alimentação perto de água ou em ambientes com alta temperatura ou alto nível de umidade.
5. Não instale perto de fontes de calor como radiadores, saídas de ar quente, fogões ou outros aparelhos que produzam calor.
6. Não insira objetos na ventilação aberta ou na área da grade da ventoinha da fonte de alimentação.
7. Não modifique os cabos e/ou conectores incluídos com esta fonte de alimentação.
8. Se esta fonte de alimentação usa cabos modulares, utilize apenas os cabos fornecidos pelo fabricante.
9. O conector de alimentação de 24 pinos tem um conector de 4 pinos removível.
   O conector de 4 pinos não é um conector P4 ou ATX 12 V.
   Não force o cabo no soquete P4 ou ATX +12 V da placa-mãe.
10. O não cumprimento de qualquer uma das instruções do fabricante e/ou qualquer uma dessas instruções de segurança anulará imediatamente todas as garantias.

REGULATORY STATEMENT

중요 한전 정보
주의: 감전의 위험이 있음!

1. 제조업체의 지침을 따르고 안전 경고에 유의하며 설치하십시오. 그렇지 않으면 파워 서플라이 또는 본체가 손상을 입거나 심각한 부상 .
2. 또는 사망으로 이어질 수 있습니다.
3. 파워 서플라이는 높은 전압의 전류가 흐릅니다.
   파워 서플라이의 케이스를 열거나 파워 서플라이를 수리하려고 하지 마십시오.
   사용자가 수리할 수 있는 부품이 없습니다.
4. 이 제품은 실내용으로 제작되었습니다.
5. 물이 있는 장소나 고온 또는 다습한 환경에서는 파워 서플라이를 사용하지 마십시오.
   라디에이터, 온풍구, 난로 등 열을 분출하는 장치 근처에 설치하지 마십시오.
6. 파워 서플라이의 통풍구 또는 팬 그릴에 이물질을 삽입하지 마십시오.
7. 파워 서플라이와 함께 제공된 케이블 또는 커넥터를 개조하지 마십시오.
8. 파워 서플라이가 모듈식 케이블을 사용하는 경우, 제조업체에서 제공한 케이블만 사용하십시오.
9. 24핀 메인 파워 커넥터에는 탈부착이 가능한 4핀 커넥터가 장착되어 있습니다.
   해당 4핀 커넥터는 P4 또는 ATX 12V 커넥터와는 다릅니다.
   이 케이블을 마더보드에 있는 P4 또는 ATX 12V 소켓에 강제로 연결하지 마십시오.
10. 제조업체의 지침이나 안전 지침을 따르지 않으면 보증과 보장 사항이 폐지됩니다.

安全に関する重要な情報
注意：感電の危険があります！

1. 製造元によるすべての指示と安全に関する警告に従って取り付けてください。
   従わなかった場合、電源装置またはシステムが損傷したり、重大なけがや死亡の原因になることがあります。
2. 電源装置には高圧電流が流れています。
   電源装置のケースを開けたり、電源装置を修理しようとしないでください。
   お客様ご自身で修理可能なコンポーネントはありません。
3. この製品は屋内での使用のみを想定して設計されています。
4. 電源装置を水の近くや高温多湿の環境で使用しないでください。
5. ラジエーター、ヒーター、ストーブなど熱源の近くには設置しないでください。
6. 電源装置の排気口や通気口に物を挿入しないでください。
7. この電源装置に付属のケーブルまたはコネクタを改造しないでください。
8. この電源装置でモジュラーケーブルを使用する場合は、製造元が提供するケーブル以外は使用しないでください。
9. 24 ピン主電源コネクタには、取り外し可能な 4 ピンコネクタがあります。
   この 4 ピンコネクタはP4 または ATX 12V コネクタではありません。
   このケーブルをマザーボードの P4 または ATX + 12V ソケットに差し込まないでください。
10. 製造元による指示またはこの安全に関する指示のいずれかの事項を遵守しなかった場合、すべての保証は直ちに無効になります。

REGULATORY STATEMENT

重要安全信息

注意触电危险！

1. 请按照所有制造商说明和安全警告进行安装。
   否则，可能会对您的电源或系统造成损害，甚至可能导致人员伤亡。
2. 电源中存在高压。
   切勿打开电源外壳或者尝试修复电源；没有用户可维护的部件。
3. 本产品仅限室内使用。
4. 切勿在有水或高温或高湿度环境下使用电源。
5. 安装位置切勿靠近任何热源，如散热器、热量记录器、烤箱或其他发热的家电。
6. 切勿在电源的通风口或风扇格栅区域中插入任何物体。
7. 切勿修改此电源随附的电缆和/或接头。
8. 如果此电源使用模块化电缆，请仅使用制造商提供的电缆。
9. 24 针主电源连接器有一个可拆卸的 4 针接口。
   此 4 针接口不是 P4 或 ATX 12V 接口。
   切勿将此电缆强行插入到主板的 P4 或 ATX +12V 插槽中。
10. 如不遵守任何制造商说明和/或这些安全说明中的任一条，所有担保和保证将立即失效。

重要安全資訊

小心觸電危險！

1. 請遵照所有製造商的指示和安全警告進行安裝。
   否則可能導致電源供應器或系統損壞，且可能造成嚴重傷亡。
2. 電源供應器存在高壓電。
   請勿開啟電源供應器機殼或嘗試維修電源供應器；所有元件皆不得由使用者自行維修。
3. 本產品的設計僅限室內使用。
4. 請勿在近水處，或者高溫或高濕度環境中使用電源供應器。
5. 請勿安裝在任何靠近熱源處 (如散熱器、熱調節器、爐具或其他會產生高溫的裝置)。
6. 請勿將任何物體插入電源供應器的開放式通風處或風扇網。
7. 請勿改裝此電源供應器隨附的連接線和/或接頭。
8. 如果此電源供應器是使用模組化連接線，請僅使用製造商所提供的連接線。
9. 24 針腳的主電源線接頭具有卸除式 4 針腳接頭。
   此 4 針腳接頭並非 P4 或 ATX 12V 接頭。
   請勿強行將此纜線插入主機板上的 P4 或 ATX +12V 插座。
10. 若未能遵守任何製造商的指示和/或安全指示，所有保固與保證將立即失效。

限用物质及元素列表/限用物質及元素清單

ROHS COMPLIANCE

产品名称：交换式电源供应器（型号：PA-7B2BB）						
	有害物质					
单元Unit	铅(Pb)	汞(Hg)	镉(Cd)	六价铬(Cr^{+6})	多溴联苯(PBB)	多溴联苯醚(PBDE)
外壳 Case	×	○	○	○	○	○
綫材 Wire	×	○	○	○	○	○
主电路板 The main circuit board	○	○	○	○	○	○
电阻 Resistor	○	○	○	○	○	○
电容 Capacitance	○	○	○	○	○	○
二極体 Diode	×	○	○	○	○	○
貼片二極体 SMD DIODE	×	○	○	○	○	○
集成电路 IC	×	○	○	○	○	○
变压 - 线圈 Transformer - coil	○	○	○	○	○	○
保险丝 FUSE	○	○	○	○	○	○
塑胶零件 Plastic parts	○	○	○	○	○	○
包装材料 Packaging materials	○	○	○	○	○	○

本表格依据SJ/T 11364的规定编制。
○: 表示该有害物质在该部件所有均质材料中的含量均在GB/T 26572规定的限量要求下。
×: 表示该有害物质至少在该部件的某一均值材料中的含量超出GB/T 26572官定的限量要求。
说明：电路板：单板/电路模块上电子元器件的陶瓷或玻璃中含铅。

限用物质及元素列表/限用物質及元素清單

ROHS COMPLIANCE

產品名稱：交換式電源供應器（型號：PA-7B2BB）						
	有害物質					
單元Unit	鉛(Pb)	汞(Hg)	鎘(Cd)	六價鉻(Cr^{+6})	多溴聯苯(PBB)	多溴聯苯醚(PBDE)
外殼 Case	–	○	○	○	○	○
線材 Wire	–	○	○	○	○	○
主電路板 The main circuit board	○	○	○	○	○	○
電阻 Resistor	○	○	○	○	○	○
電容 Capacitance	○	○	○	○	○	○
二極體 Diode	–	○	○	○	○	○
貼片二極體 SMD DIODE	–	○	○	○	○	○
集成電路 IC	–	○	○	○	○	○
變壓器 - 線圈 Transformer - coil	○	○	○	○	○	○
保險絲 FUSE	○	○	○	○	○	○
塑膠零件 Plastic parts	○	○	○	○	○	○
包裝材料 Packaging materials	○	○	○	○	○	○

備考1. “超出0.1wt%”及“超出0.01wt%”係指限用物質之百分比含量超出百分比含量基準值。
備考2. “○” 係指該項限用物質之百分比含量未超出百分比含量基準值。
備考3. “–” 係指該項限用物質為排除項目。

SUPPORT AND SERVICE

SUPPORT AND SERVICE

If you have any questions or problems with the NZXT product you purchased, please don't hesitate to contact us using our support system. service@nzxt.com support.nzxt.com

Please include a detailed explanation of your problem and your proof of purchase. For comments and suggestions, you can e-mail our design team, designer@nzxt.com.

Lastly we would like to thank you for your support by purchasing this product. For more information about NZXT, please visit us online. NZXT Website: NZXT.com

SOPORTE Y SERVICIO

Si tiene preguntas o problemas con el producto NZXT que usted compró, no dure en ponerse en contacto con service@nzxt.com y suministrar una explicación detallada de su problema así como su prueba de compra.

Puede hacer consultas sobre piezas de repuesto en support.nzxt.com.

Para comentarios y sugerencias, escriba un mensaje de correo electrónico a nuestro equipo de diseño: designer@nzxt.com.

Gracias por comprar un producto NZXT. Para más información acerca de NZXT, visítenos en línea. Página web de NZXT: NZXT.com

SUPPORT ET SERVICE

Si vous avez des questions ou des problèmes avec le produit NZXT que vous avez acheté, n'hésitez pas à contacter service@nzxt.com avec une description détaillée de votre problème et votre preuve d'achat.

Vous pouvez aussi commander des pièces de remplacement auprès support.nzxt.com.

Pour les commentaires et les suggestions, envoyez un email à notre équipe de design, designer@nzxt.com.

Merci d'avoir acheté ce produit de NZXT. Pour plus d'informations sur NZXT, visitez notre site Web. Site Web de NZXT : NZXT.com

KUNDENDIENST UND SERVICE

Falls Fragen oder Probleme bezüglich Ihres NZXT-Produktes auftreten, wenden Sie sich bitte mit einer detaillierten Problembeschreibung und Ihrem Kaufbeleg an service@nzxt.com.

Ersatzteile können Sie unter support.nzxt.com anfragen.

Kommentare und Anregungen senden Sie bitte per designer@nzxt.com an unser Designteam.

Vielen Dank, dass Sie ein NZXT-Produkt erworben haben. Weitere Informationen über NZXT erhalten Sie im Internet. NZXT-Webseite: NZXT.com

ASSISTENZA E SERVIZIO

In caso di dubbi o problemi con il prodotto NZXT acquistato, non esitate a contattarci utilizzando il nostro sistema di assistenza. support.nzxt.com
Includere una spiegazione dettagliata del problema e la prova di acquisto. service@nzxt.com

Per commenti e suggerimenti, siete pregati di inviare un messaggio al nostro team di progettisti, all'indirizzo: designer@nzxt.com.

Infine, vogliamo ringraziarvi del vostro supporto con l'acquisto di questo prodotto. Per altre informazioni su NZXT, visitate il nostro sito.
Sito NZXT: NZXT.com

ASSISTÊNCIA E MANUTENÇÃO

Caso tenha questões ou problemas com o produto NZXT adquirido, não hesite em contactar-nos através do endereço service@nzxt.com fornecendo a explicação detalhada do seu problema e a prova de compra.

Poderá solicitar peças de substituição através do endereço support.nzxt.com.

Para comentários e sugestões, contacte a nossa equipa de design através do endereço de e-mail, designer@nzxt.com.

Obrigado por ter adquirido um produto NZXT. Para mais informações acerca da NZXT, visitenos online. Web site da NZXT: NZXT.com

지원 및 서비스

구입한 NZXT 제품과 관련하여 질문 또는 문제가 있을 경우, 당사의 지원 시스템 support.nzxt.com 을 사용하여 문의하십시오.문제를 자세히 기술하고 구매 증빙을 제출하십시오. service@nzxt.com

의견 또는 제안 사항이 잇을경우 당사 설계 팀에 designer@nzxt.com으로 이메일을 보내십시오.

마지막으로이 제품을 구입하여 당사를 응원해 주셔서 감사합니다. NZXT에 대해 자세히 알려면온라인으로 방문하십시오. NZXT 웹사이트: NZXT.com

サポートおよびサービス

購入されましたNZXTの製品に関するご質問または問題は、問題の詳細および購入の証明を添えて、ご遠慮なく service@nzxt.com までご連絡ください。

交換部品は support.nzxt.com までお尋ねください。

ご意見およびご提案は弊社設計チーム、designer@nzxt.com までメールを送信してください。

NZXT製品をご購入いただきましてありがとうございます。NZXTに関する詳細は、インターネット上のウェブサイトをご覧ください。NZXT ウェブサイト: NZXT.com

支持和服务

如果有任何疑问或者在使用 NZXT 产品的过程中遇到任何问题，欢迎联络 service@nzxt.com，联络时请提供关于问题的详细说明及购买凭证。

您可以向 support.nzxt.com 查询更换部件。

如有任何意见或建议,欢迎致信我们的设计团队，电子邮件地址是 designer@nzxt.com。

感谢您购买 NZXT 产品。有关 NZXT的更多信息，请造访我们的在线网站。NZXT 网站：NZXT.com

支援和服務

如果在使用NZXT 產品的過程中有遇到任何問題或疑問，歡迎聯繫 service@nzxt.com， 並請提供問題的詳細敘述及購買證明。

您可以透過 support.nzxt.com 查詢更換部件。

如有任何意見或建議，歡迎來信與設計團隊聯繫designer@nzxt.com。

最後，感謝您購買 NZXT 產品。有關 NZXT 的更多資訊，請瀏覽我們的網站。NZXT 網站：NZXT.com

NZXT

NZXT, Inc. | 15736 E. Valley Blvd, City of Industry, CA 91744, USA
NZXT Europe GmbH | Ammerthalstrasse 32 Kirchheim bei Muenchen 85551, Germany
NZXT UK Ltd. | First Floor 5 Fleet Place London EC4M 7RD, GB United Kingdom
+1 (800) 228-9395 / service@nzxt.com / nzxt.com
立光科技國際股份有限公司 | 台北市中山區長安東路二段 36巷 3號 1樓